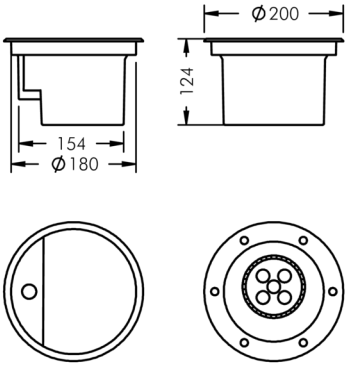

Uplight 200

8 659 016 029

5 × 1 W, 369 lm, 3000 K warm white,
linear vertical 8° / 47°

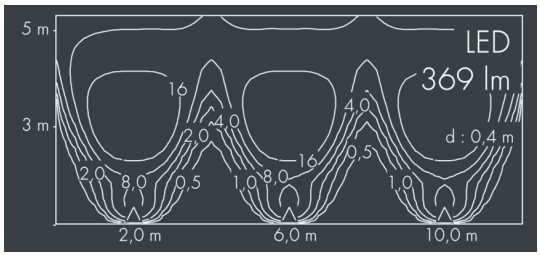

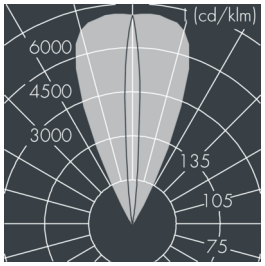

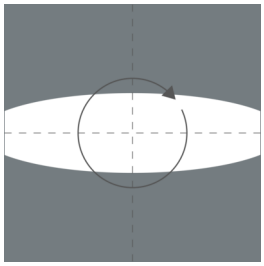

Customized solutions and modifications are possible: Special RAL, DB or NCS colours as polyester powder coat, luminaires in 2700 K and other colour temperatures and versions for high ambient temperature.

Specification text

housing of corrosion-resistant die-cast aluminum AlSi12, double polyester powder coated by high-quality and UV-stabilized coating process, Colour: black RAL 7021, all exterior parts are stainless steel, tempered safety glass flush with frame, anti-reflective coating from 1 side, dark screenprint, for loads up to max. 5000 kg (according to IEC / EN 60598-2-13), silicon gasket, cover frame and closure with 6 stainless steel screws, cable gland: M20, connecting terminal: 3 pole, highly efficient anodized rotationally symmetrical reflector, tilt range: 0-15, 0,8 m cable H07RN-F3G1,5, integral control gear, CRI > 80, max 2 SDCM, service life L90/B10 > 50.000 h, Beam angle (FWHM): 8° / 47°, luminous flux: 369 lm, wattage: 5 W, delivered lumens 72 lm/W, protection type IP67, protection class I, impact resistance IK10, dimensions: Ø 200 mm, width 124 mm, weight 3.3 kg

The modular luminaire design makes the replacement of components possible. The product meets the demands of the applicable EU guidelines and product safety regulations and bears the CE mark.

CE IP67 IK10

Specification

Wattage	5 W	Beam angle (FWHM)	8° / 47°
Delivered lumens	72 lm/W	Housing colour	black RAL 7021
Light source	LED 3000 K	Power supply cable	Ø 6 – 13 mm
Color Rendering Index	CRI > 80	Protection type	IP67
Colour tolerance	max 2 SDCM	Protection class	I
Lifetime ta 25° C	L90/B10 > 50.000 h	Impact resistance	IK10
Control gear	on / off	Dimensions	Ø 200 mm, width 124 mm
Input voltage AC	180 – 240 V	Weight	3,30 kg
Input voltage DC	-	Max. ambient temperature ta	40°