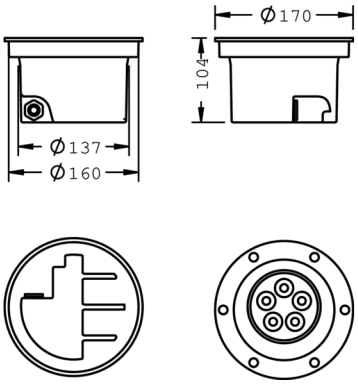

Uplight 180 S

8 654 115 139

5 × 2 W, 555 lm, 4000 K neutral white, DALI, linear, horizontal, adjustable 6° / 55°

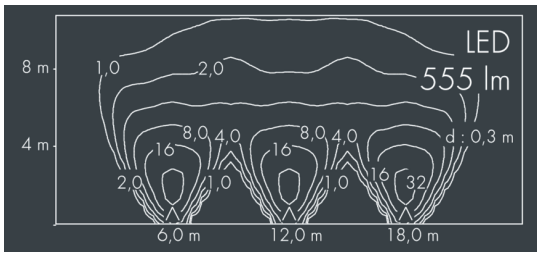

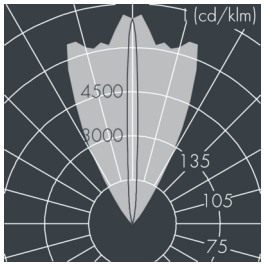

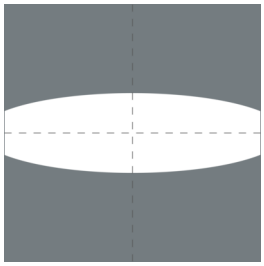

Customized solutions and modifications are possible: Special RAL, DB or NCS colours as polyester powder coat, luminaires in 2700 K and other colour temperatures and versions for high ambient temperature.

Specification text

housing of corrosion-resistant die-cast aluminum AlSi12, double polyester powder coated by high-quality and UV-stabilized coating process, Colour: black RAL 7021, all exterior parts are stainless steel, tempered safety glass flush with frame, anti-reflective coating from 1 side, with slip resistant glass, surface with square pattern print, for loads up to max. 5000 kg (according to IEC / EN 60598-2-13), silicon gasket, cover frame and closure with 6 stainless steel screws, cable gland: M20, connecting terminal: 5 pole, tilt range: 0-15°, lockable, precise PMMA optics, 0,8 m cable H07RN-F5G1, integral driver (DALI), CRI > 80, max 2 SDCM, service life L90/B10 > 50.000 h, Beam angle (FWHM): 6° / 55°, luminous flux: 555 lm, wattage: 10 W, delivered lumens 57 lm/W, protection type IP67, protection class I, impact resistance IK10, dimensions: Ø 180 mm, width 104 mm, weight 2.3 kg

The modular luminaire design makes the replacement of components possible. The product meets the demands of the applicable EU guidelines and product safety regulations and bears the CE and ENEC marks.

IP67 IK10

Specification

Wattage	10 W	Beam angle (FWHM)	6° / 55°
Delivered lumens	57 lm/W	Housing colour	black RAL 7021
Light source	LED 4000 K	Protection type	IP67
Color Rendering Index	CRI > 80	Protection class	I
Colour tolerance	max 2 SDCM	Impact resistance	IK10
Lifetime ta 25° C	L90/B10 > 50.000 h	Dimensions	Ø 180 mm, width 104 mm
Control gear	DALI	Weight	2,30 kg
Input voltage AC	220 – 240 V	Max. ambient temperature ta	50°
Input voltage DC	220 – 240 V		
Voltage protection	2 kV L/N | 4 kV L/PE		
Luminaires per B16A / C16A	50 / 50		