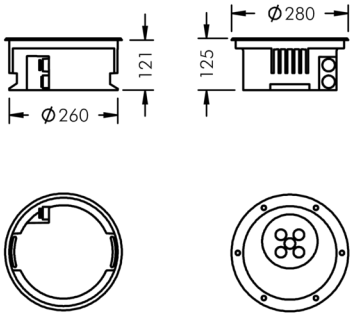

Uplight 280

8 661 119 019

5 × LED, 731 lm, RGBW (3000 K) warm white, DMX, narrow beam, adjustable 17°

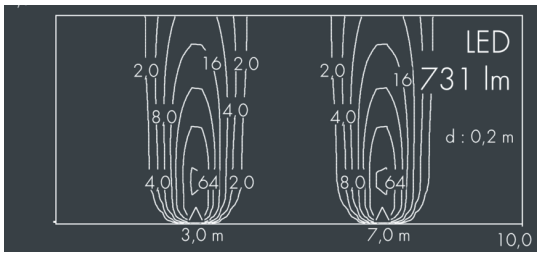

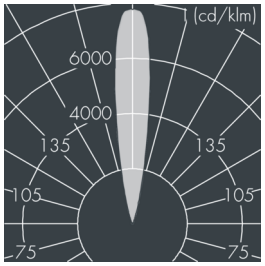

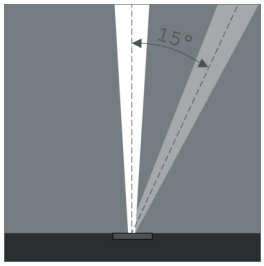

Customized solutions and modifications are possible: Special RAL, DB or NCS colours as polyester powder coat, luminaires in 2700 K and other colour temperatures and versions for high ambient temperature.

Specification text

housing of corrosion-resistant die-cast aluminum AlSi12, double polyester powder coated by high-quality and UV-stabilized coating process, Colour: black RAL 7021, all exterior parts are stainless steel, tempered safety glass flush with frame, anti-reflective coating from 1 side, with slip resistant glass (R13 according to DIN EN 51130), for loads up to max. 5000 kg (according to IEC / EN 60598-2-13), silicon gasket, cover frame and closure with 6 stainless steel screws, cable gland: M20, connecting terminal: 6 pole, lockable, tilt range: 0-15, precise PMMA optics, 0,8 m cable H07RN-F3G1,5, integral control gear, max 2 SDCM, service life L90/B10 > 50.000 h, Beam angle (FWHM): 17°, luminous flux: 731 lm, wattage: 23 W, delivered lumens 32 lm/W, protection type IP67, protection class I, impact resistance IK10, dimensions: Ø 280 mm, width 121 mm, weight 6.6 kg

The modular luminaire design makes the replacement of components possible. The product meets the demands of the applicable EU guidelines and product safety regulations and bears the CE mark.

IP67 IK10

Specification

Wattage	23 W	Beam angle (FWHM)	17°
Delivered lumens	32 lm/W	Housing colour	black RAL 7021
Light source	LED RGBW (3000 K)	Power supply cable	Ø 6 – 13 mm
Colour tolerance	max 2 SDCM	Protection type	IP67
Lifetime ta 25° C	L90/B10 > 50.000 h	Protection class	I
Control gear	DMX	Impact resistance	IK10
Input voltage AC	120 – 250 V	Dimensions	Ø 280 mm, width 121 mm
Input voltage DC	120 – 250 V	Weight	6,60 kg
Voltage protection	2 kV L/N | 2 kV L/PE	Max. ambient temperature ta	30°