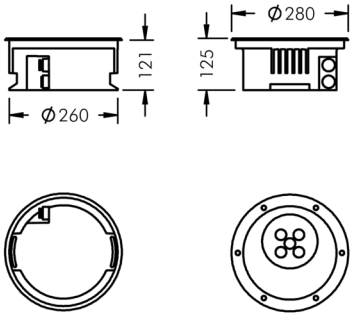

Uplight 280

8 661 115 029

5 × 2,5 W, 793 lm, 4000 K neutral white,
linear vertical 46° / 6°

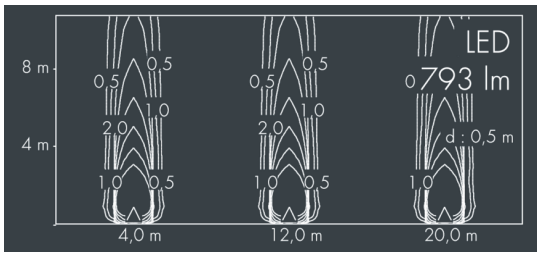

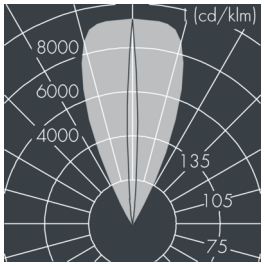

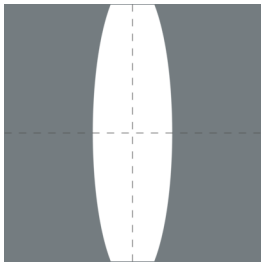

Customized solutions and modifications are possible: Special RAL, DB or NCS colours as polyester powder coat, luminaires in 2700 K and other colour temperatures and versions for high ambient temperature.

Specification text

housing of corrosion-resistant die-cast aluminum AlSi12, double polyester powder coated by high-quality and UV-stabilized coating process, Colour: black RAL 7021, all exterior parts are stainless steel, tempered safety glass flush with frame, anti-reflective coating from 1 side, with slip resistant glass (R13 according to DIN EN 51130), for loads up to max. 5000 kg (according to IEC / EN 60598-2-13), silicon gasket, cover frame and closure with 6 stainless steel screws, cable gland: M20, connecting terminal: 3 pole, lockable, tilt range: 0-15, 0,8 m cable H07RN-F3G1,5, integral control gear, CRI > 80, max 2 SDCM, service life L90/B10 > 50.000 h, Beam angle (FWHM): 46° / 6°, luminous flux: 793 lm, wattage: 13 W, delivered lumens 61 lm/W, protection type IP67, protection class I, impact resistance IK10, dimensions: Ø 280 mm, width 121 mm, weight 6.8 kg

The modular luminaire design makes the replacement of components possible. The product meets the demands of the applicable EU guidelines and product safety regulations and bears the CE mark.

IP67 IK10

Specification

Wattage	13 W	Beam angle (FWHM)	46° / 6°
Delivered lumens	61 lm/W	Housing colour	black RAL 7021
Light source	LED 4000 K	Power supply cable	Ø 6 – 13 mm
Color Rendering Index	CRI > 80	Protection type	IP67
Colour tolerance	max 2 SDCM	Protection class	I
Lifetime ta 25° C	L90/B10 > 50.000 h	Impact resistance	IK10
Control gear	on / off	Dimensions	Ø 280 mm, width 121 mm
Input voltage AC	200 – 260 V	Weight	6,80 kg
Input voltage DC	-	Max. ambient temperature ta	35°