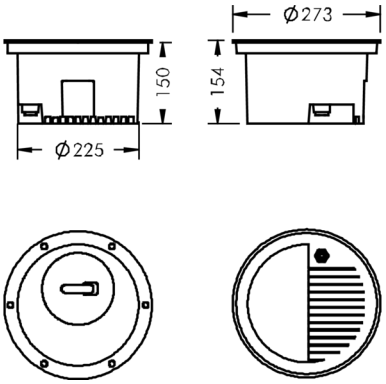

Uplight 280

8 623 012 069

For

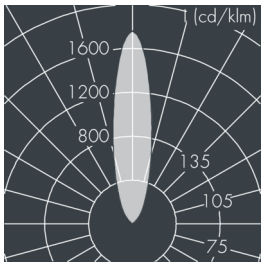

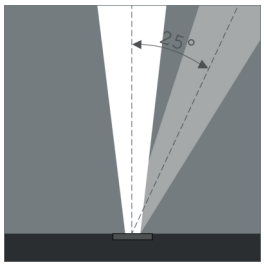

Customized solutions and modifications are possible: Special RAL, DB or NCS colours as polyester powder coat, luminaires in 2700 K and other colour temperatures and versions for high ambient temperature.

Specification text

housing of corrosion-resistant die-cast aluminum AlSi12, double polyester powder coated by high-quality and UV-stabilized coating process, Colour: black RAL 7021, all exterior parts are stainless steel, tempered safety glass flush with frame, anti-reflective coating from 1 side, for loads up to max. 5000 kg (according to IEC / EN 60598-2-13), silicon gasket, closure with 6 stainless steel screws, cable gland: M20 (stainless steel), connecting terminal: 3 pole, rotationally symmetrical aluminum reflector, lockable, tilt range: 0-25, 0,8 m cable H05RN-F3G1, integral ballast and ignitor, LPF, HPF available on request, Beam angle (FWHM): 23°, luminous flux: 6900 lm, wattage: 70 W, delivered lumens 92 lm/W, protection type IP67, protection class I, impact resistance IK10, dimensions (L×H×W): 280 × 150 × 280 mm, weight 5.9 kg

The modular luminaire design makes the replacement of components possible. The product meets the demands of the applicable EU guidelines and product safety regulations and bears the CE mark.

IP67 IK10

Specification

Wattage	70 W	Beam angle (FWHM)	23°
Delivered lumens	92 lm/W	Housing colour	black RAL 7021
Control gear	on / off	Power supply cable	Ø 6 – 11 mm
		Protection type	IP67
		Protection class	I
		Impact resistance	IK10
		Dimensions	280 × 150 × 280 mm
		Weight	5,90 kg