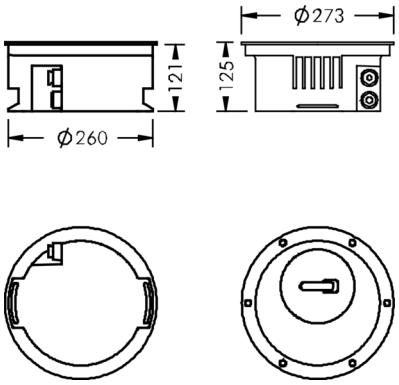

Uplight 280

8 600 112 069

For

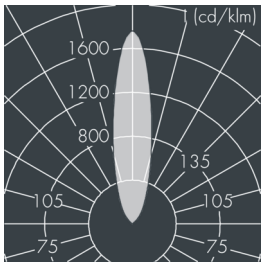

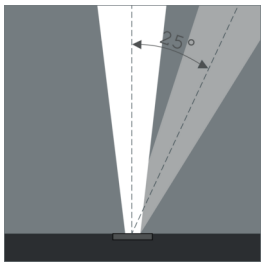

Customized solutions and modifications are possible: Special RAL, DB or NCS colours as polyester powder coat, luminaires in 2700 K and other colour temperatures and versions for high ambient temperature.

Specification text

housing of corrosion-resistant die-cast aluminum AlSi12, double polyester powder coated by high-quality and UV-stabilized coating process, Colour: black RAL 7021, all exterior parts are stainless steel, tempered safety glass flush with frame, anti-reflective coating from 1 side, with slip resistant glass (R13 according to DIN EN 51130), for loads up to max. 5000 kg (according to IEC / EN 60598-2-13), silicon gasket, Cover and closure by 6 stainless steel scews, in combination with installation sleeve 126 0 160 060, cable gland: M20, connecting terminal: 3 pole, rotationally symmetrical aluminum reflector, tilt range: 0-25, 0,8 m cable H07RN-F3G1,5, integral ballast and ignitor, Beam angle (FWHM): 23°, luminous flux: 3300 lm, wattage: 35 W, delivered lumens 69 lm/W, protection type IP67, protection class I, impact resistance IK10, dimensions: Ø 275 mm, width 135 mm, weight 6.4 kg

The modular luminaire design makes the replacement of components possible. The product meets the demands of the applicable EU guidelines and product safety regulations and bears the CE mark.

IP67 IK10

Specification

Wattage	35 W	Beam angle (FWHM)	23°
Delivered lumens	69 lm/W	Housing colour	black RAL 7021
Control gear	on / off	Power supply cable	Ø 6 – 13 mm
		Protection type	IP67
		Protection class	I
		Impact resistance	IK10
		Dimensions	Ø 275 mm, width 135 mm
		Weight	6,40 kg