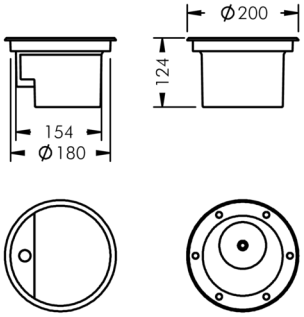

Uplight 200

8 616 111 009

For

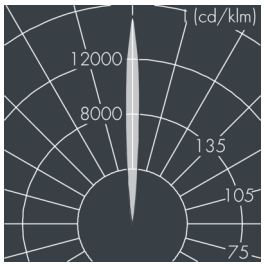

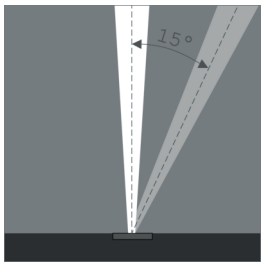

Customized solutions and modifications are possible: Special RAL, DB or NCS colours as polyester powder coat, luminaires in 2700 K and other colour temperatures and versions for high ambient temperature.

Specification text

housing of corrosion-resistant die-cast aluminum AlSi12, double polyester powder coated by high-quality and UV-stabilized coating process, Colour: black RAL 7021, all exterior parts are stainless steel, tempered safety glass flush with frame, anti-reflective coating from 1 side, with slip resistant glass (R13 according to DIN EN 51130), for loads up to max. 5000 kg (according to IEC / EN 60598-2-13), silicon gasket, cover frame and closure with 6 stainless steel screws, cable gland: M20, connecting terminal: 3 pole, rotationally symmetrical aluminum reflector, lockable, tilt range: 0-15, 0,8 m cable H07RN-F3G1,5, encapsulated electronic ballast, Beam angle (FWHM): 8°, luminous flux: 1600 lm, wattage: 20 W, delivered lumens 70 lm/W, protection type IP67, protection class I, impact resistance IK10, dimensions (L×H×W): 200 × 125 × 200 mm, weight 3.42 kg

The modular luminaire design makes the replacement of components possible. The product meets the demands of the applicable EU guidelines and product safety regulations and bears the CE mark.

IP67 IK10

Specification

Wattage	20 W	Beam angle (FWHM)	8°
Delivered lumens	70 lm/W	Housing colour	black RAL 7021
Control gear	on / off	Power supply cable	Ø 6 – 13 mm
		Protection type	IP67
		Protection class	I
		Impact resistance	IK10
		Dimensions	200 × 125 × 200 mm
		Weight	3,42 kg