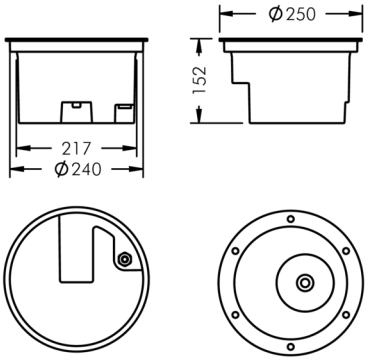

Uplight 260

8 666 115 119

40 W, 3656 lm, 4000 K neutral white, DALI, narrow beam, adjustable 11°

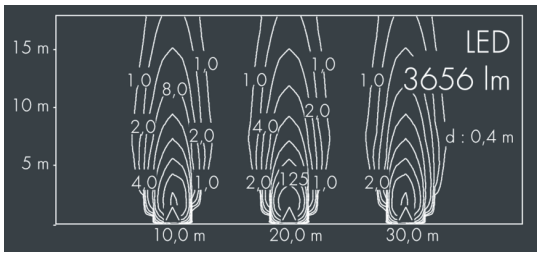

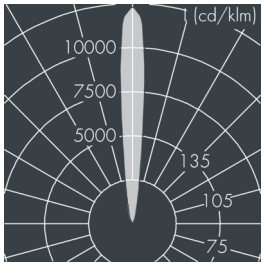

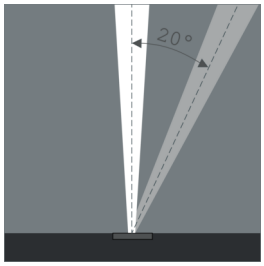

Customized solutions and modifications are possible: Special RAL, DB or NCS colours as polyester powder coat, luminaires in 2700 K and other colour temperatures and versions for high ambient temperature.

Specification text

housing of corrosion-resistant die-cast aluminum AlSi12, double polyester powder coated by high-quality and UV-stabilized coating process, Colour: black RAL 7021, all exterior parts are stainless steel, tempered safety glass flush with frame, anti-reflective coating from 1 side, with slip resistant glass, surface with square pattern print, for loads up to max. 4500 kg (according to IEC / EN 60598-2-13), silicon gasket, cover frame and closure with 6 stainless steel screws, Luminaire for installation flush with surrounding surface (in combination with installation sleeve 126 0 341 060), cable gland: M20, connecting terminal: 5 pole, highly efficient anodized rotationally symmetrical reflector, lockable, tilt range: 0-20°, lockable, with Heatslide mechanism for optimal heat dissipation, 0,8 m cable H07RN-F5G1, integral driver (DALI), CRI > 85, max 2 SDCM, service life L80/B20 > 50.000 h, Beam angle (FWHM): 11°, luminous flux: 3656 lm, wattage: 40 W, delivered lumens 91 lm/W, protection type IP68, protection class I, impact resistance IK10, dimensions: Ø 260 mm, width 152 mm, weight 5.6 kg

The modular luminaire design makes the replacement of components possible. The product meets the demands of the applicable EU guidelines and product safety regulations and bears the CE and ENEC marks.

IP 68 IK 10

Specification

Wattage	40 W	Beam angle (FWHM)	11°
Delivered lumens	91 lm/W	Housing colour	black RAL 7021
Light source	LED 4000 K	Protection type	IP68
Color Rendering Index	CRI > 85	Protection class	I
Colour tolerance	max 2 SDCM	Impact resistance	IK10
Lifetime ta 25° C	L80/B20 > 50.000 h	Dimensions	Ø 260 mm, width 152 mm
Control gear	DALI	Weight	5,60 kg
Input voltage AC	110 – 240 V	Max. ambient temperature ta	35°
Input voltage DC	195 – 240 V		
Voltage protection	3 kV L/N | 4 kV L/PE		
Luminaires per B16A / C16A	30 / 51		