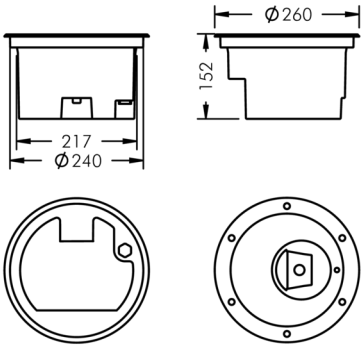

Uplight 260

8 665 016 009

40 W, 1628 lm, 3000 K warm white,
wall washer, adjustble optics 20° / 78°

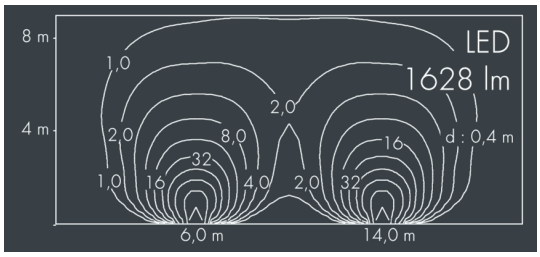

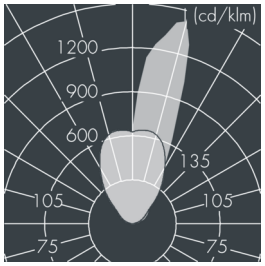

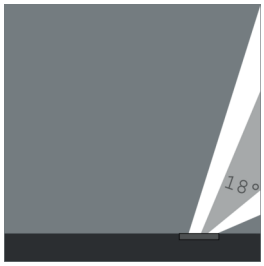

Customized solutions and modifications are possible: Special RAL, DB or NCS colours as polyester powder coat, luminaires in 2700 K and other colour temperatures and versions for high ambient temperature.

Specification text

housing of corrosion-resistant die-cast aluminum AlSi12, double polyester powder coated by high-quality and UV-stabilized coating process, Colour: black RAL 7021, all exterior parts are stainless steel, tempered safety glass flush with frame, anti-reflective coating from 1 side, dark screenprint, for loads up to max. 4500 kg (according to IEC / EN 60598-2-13), silicon gasket, cover frame and closure with 6 stainless steel screws, cable gland: M20, connecting terminal: 3 pole, highly efficient anodized rotationally symmetrical reflector, wall washer lens with optical structure and integral, adjustable glare shield, tilt range: 0-18°, lockable, with Heatslide mechanism for optimal heat dissipation, 0,8 m cable H07RN-F3G1, integral driver (AC), CRI > 80, max 2 SDCM,
service life L90/B10 > 50.000 h,
Beam angle (FWHM): 20° / 78°, luminous flux: 1628 lm, wattage: 40 W, delivered lumens 41 lm/W, protection type IP68, protection class I, impact resistance IK10, dimensions: Ø 260 mm, width 152 mm, weight 5.7 kg

The modular luminaire design makes the replacement of components possible. The product meets the demands of the applicable EU guidelines and product safety regulations and bears the CE mark.

IP68 IK10

Specification

Wattage	40 W	Beam angle (FWHM)	20° / 78°
Delivered lumens	41 lm/W	Housing colour	black RAL 7021
Light source	LED 3000 K	Protection type	IP68
Color Rendering Index	CRI > 80	Protection class	I
Colour tolerance	max 2 SDCM	Impact resistance	IK10
Lifetime ta 25° C	L90/B10 > 50.000 h	Dimensions	Ø 260 mm, width 152 mm
Control gear	on / off	Weight	5,70 kg
Input voltage AC	120 – 277 V	Max. ambient temperature ta	35°
Voltage protection	6 kV L/N | 6 kV L/PE		
Luminaires per B16A / C16A	16 / 28		