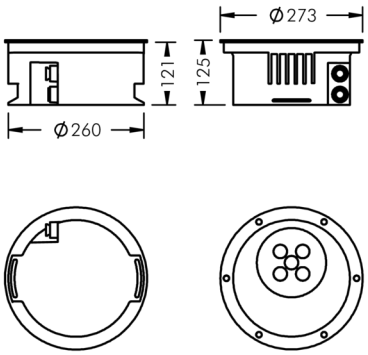

Uplight 280

8 662 016 029

5 × 2,5 W, 741 lm, 3000 K warm white,
linear vertical 46° / 6°

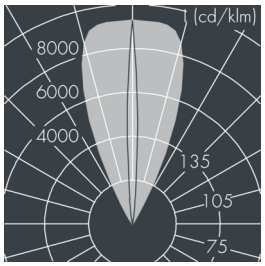

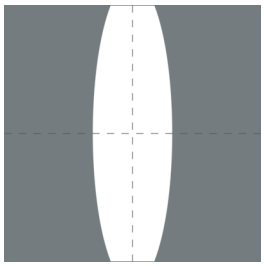

Customized solutions and modifications are possible: Special RAL, DB or NCS colours as polyester powder coat, luminaires in 2700 K and other colour temperatures and versions for high ambient temperature.

Specification text

housing of corrosion-resistant die-cast aluminum AlSi12, double polyester powder coated by high-quality and UV-stabilized coating process, Colour: black RAL 7021, all exterior parts are stainless steel, tempered safety glass flush with frame, anti-reflective coating from 1 side, dark screenprint, for loads up to max. 5000 kg (according to IEC / EN 60598-2-13), silicon gasket, cover frame and closure with 6 stainless steel screws, in combination with installation sleeve 126 0 160 060, cable gland: M20, connecting terminal: 3 pole, highly efficient anodized rotationally symmetrical reflector, lockable, tilt range: 0-15, 0,8 m cable H07RN-F3G1,5, integral control gear, CRI > 80, max 2 SDCM, service life L90/B10 > 50.000 h, Beam angle (FWHM): 46° / 6°, luminous flux: 741 lm, wattage: 13 W, delivered lumens 57 lm/W, protection type IP67, protection class I, impact resistance IK10, dimensions: Ø 280 mm, width 121 mm, weight 6.8 kg

The modular luminaire design makes the replacement of components possible. The product meets the demands of the applicable EU guidelines and product safety regulations and bears the CE mark.

IP67 IK10

Specification

Wattage	13 W	Beam angle (FWHM)	46° / 6°
Delivered lumens	57 lm/W	Housing colour	black RAL 7021
Light source	LED 3000 K	Power supply cable	Ø 6 – 13 mm
Color Rendering Index	CRI > 80	Protection type	IP67
Colour tolerance	max 2 SDCM	Protection class	I
Lifetime ta 25° C	L90/B10 > 50.000 h	Impact resistance	IK10
Control gear	on / off	Dimensions	Ø 280 mm, width 121 mm
Input voltage AC	200 – 260 V	Weight	6,80 kg
Input voltage DC	-	Max. ambient temperature ta	35°