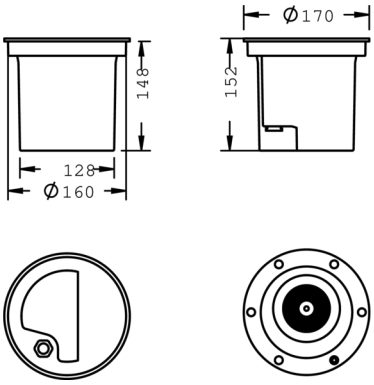

Uplight 180

8 656 016 019

11 W, 859 lm, 3000 K warm white,
narrow beam, adjustable 8°

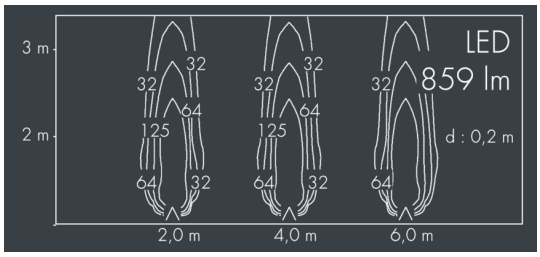

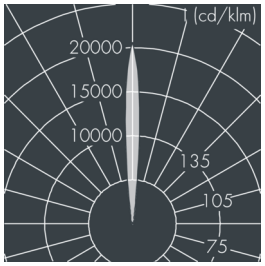

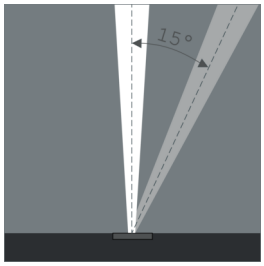

Customized solutions and modifications are possible: Special RAL, DB or NCS colours as polyester powder coat, luminaires in 2700 K and other colour temperatures and versions for high ambient temperature.

Specification text

housing of corrosion-resistant die-cast aluminum AlSi12, double polyester powder coated by high-quality and UV-stabilized coating process, Colour: black RAL 7021, all exterior parts are stainless steel, tempered safety glass flush with frame, anti-reflective coating from 1 side, dark screenprint, for loads up to max. 5000 kg (according to IEC / EN 60598-2-13), silicon gasket, cover frame and closure with 6 stainless steel screws, cable gland: M20, connecting terminal: 3 pole, highly efficient faceted rotationally symmetrical reflector, lockable, tilt range: 0-15°, lockable, 0,8 m cable H07RN-F3G1, integral driver (AC/DC), CRI > 80, max 3 SDCM, service life L90/B10 > 50.000 h, Beam angle (FWHM): 8°, luminous flux: 859 lm, wattage: 11 W, delivered lumens 78 lm/W, protection type IP68, protection class I, impact resistance IK10, dimensions: Ø 180 mm, width 152 mm, weight 2.6 kg

The modular luminaire design makes the replacement of components possible. The product meets the demands of the applicable EU guidelines and product safety regulations and bears the CE and ENEC marks.

IP68 IK10

Specification

Wattage	11 W	Beam angle (FWHM)	8°
Delivered lumens	78 lm/W	Housing colour	black RAL 7021
Light source	LED 3000 K	Protection type	IP68
Color Rendering Index	CRI > 80	Protection class	I
Colour tolerance	max 3 SDCM	Impact resistance	IK10
Lifetime ta 25° C	L90/B10 > 50.000 h	Dimensions	Ø 180 mm, width 152 mm
Control gear	on / off	Weight	2,60 kg
Input voltage AC	110 – 240 V	Max. ambient temperature ta	35°
Input voltage DC	195 – 240 V		
Voltage protection	2 kV L/N | 2 kV L/PE		
Luminaires per B16A / C16A	27 / 45		