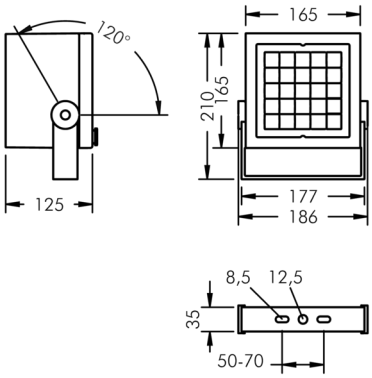

Superlight Nano 5

8 830 056 629

25 × 2,3 W, 3715 lm, 3000 K warm white, 1-10V, linear vertical 42° / 7°

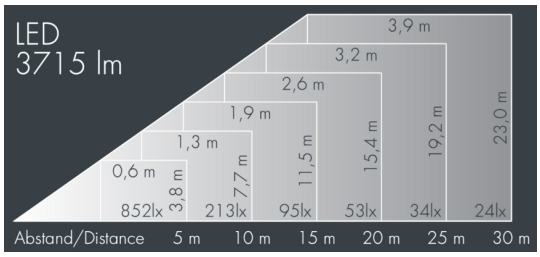

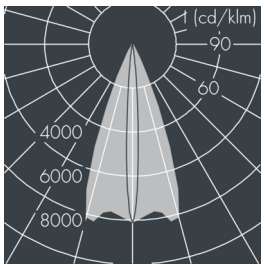

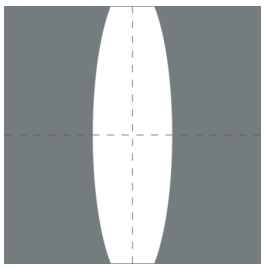

Customized solutions and modifications are possible: Special RAL, DB or NCS colours as polyester powder coat, luminaires in 2700 K and other colour temperatures and versions for high ambient temperature.

Specification text

housing made of corrosion-resistant die-cast aluminum AlSi12, polyester powder coated by high-quality and UV-stabilized coating process, Colour: silver grey , all exterior parts are stainless steel, tempered safety glass, anti-reflective coating from 1 side, dark screenprint, silicon gasket, mounting bracket powder coated aluminum with tilt scale: 2 long holes Ø 8.5 mm, spacing 50 - 70 mm, 1 centre hole Ø 12.5 mm, tilt range: 120°, cable gland: 2 x M20, cable entry: 2, connecting terminal: 5 pole, highly efficient optics made of transparent thermoplastic for precise lighting tasks , integral 1-10 V driver, CRI > 80, max 2 SDCM, service life L90/B10 > 50.000 h, Beam angle (FWHM): 42° / 7°, luminous flux: 3715 lm, wattage: 57 W, delivered lumens 65 lm/W, protection type IP67, protection class I, impact resistance IK08, windage area 0,03 m², dimensions (L×H×W): 165 × 125 × 165 mm, weight 3.05 kg

The modular luminaire design makes the replacement of components possible. The product meets the demands of the applicable EU guidelines and product safety regulations and bears the CE and ENEC marks.

IP 67 IK 08

Specification

Wattage	57 W	Beam angle (FWHM)	42° / 7°
Delivered lumens	65 lm/W	Housing colour	silver grey
Light source	LED 3000 K	Power supply cable	Ø 6 – 13 mm
Color Rendering Index	CRI > 80	Protection type	IP67
Colour tolerance	max 2 SDCM	Protection class	I
Lifetime ta 25° C	L90/B10 > 50.000 h	Impact resistance	IK08
Control gear	1-10V	Windage area	0,03m²
Input voltage AC	110 – 240 V	Dimensions	165 × 125 × 165 mm
Input voltage DC	190 – 250 V	Weight	3,05 kg
Voltage protection	4 kV L/N | 5 kV L/PE	Max. ambient temperature ta	35°
Luminaires per B16A / C16A	30 / 51		