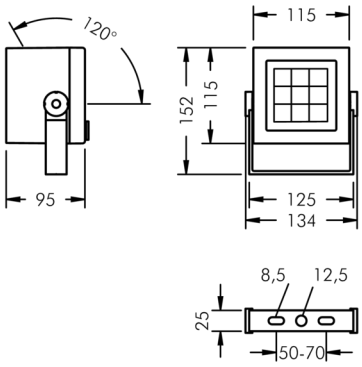

Superlight Nano 3

8 819 065 019

9 × 2,5 W, 1693 lm, 4000 K neutral white, narrow beam 6°

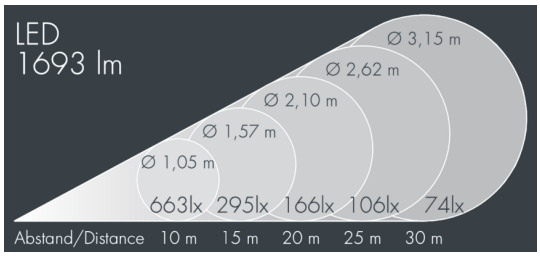

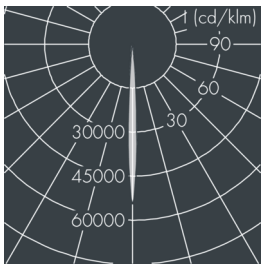

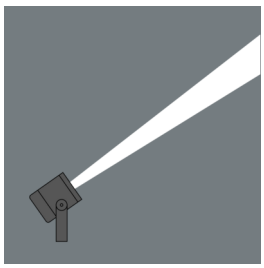

Customized solutions and modifications are possible: Special RAL, DB or NCS colours as polyester powder coat, luminaires in 2700 K and other colour temperatures and versions for high ambient temperature.

Specification text

housing made of die-cast aluminum AlSi12, polyester powder coated by high-quality and UV-stabilized coating process, Colour: white RAL 9002, all exterior parts are stainless steel, tempered safety glass, anti-reflective coating from 1 side, dark screenprint, silicon gasket, powder coated die cast zinc mounting bracket with tilt scale: 2 drilled holes Ø 9 mm, spacing 60 mm, 1 centre hole Ø 13 mm, tilt range: 120°, cable gland: M20, connecting terminal: 3 pole, highly efficient optics made of transparent thermoplastic for precise lighting tasks , integral driver (AC/DC), CRI > 80, max 2 SDCM,
service life L90/B10 > 50.000 h, Beam angle (FWHM): 6°, luminous flux: 1693 lm, wattage: 22 W, delivered lumens 77 lm/W, protection type IP67, protection class I, impact resistance IK08, windage area 0,013 m², dimensions (L×H×W): 115 × 95 × 115 mm, weight 1.5 kg

The modular luminaire design makes the replacement of components possible. The product meets the demands of the applicable EU guidelines and product safety regulations and bears the CE and ENEC marks.

IP67 IK08

Specification

Wattage	22 W	Beam angle (FWHM)	6°
Delivered lumens	77 lm/W	Housing colour	white RAL 9002
Light source	LED 4000 K	Power supply cable	Ø 6 – 13 mm
Color Rendering Index	CRI > 80	Protection type	IP67
Colour tolerance	max 2 SDCM	Protection class	I
Lifetime ta 25° C	L90/B10 > 50.000 h	Impact resistance	IK08
Control gear	on / off	Windage area	0,013m²
Input voltage AC	100 – 277 V	Dimensions	115 × 95 × 115 mm
Input voltage DC	105 – 277 V	Weight	1,50 kg
Voltage protection	2 kV L/N | 4 kV L/PE	Max. ambient temperature ta	35°
Luminaires per B16A / C16A	69 / 81		