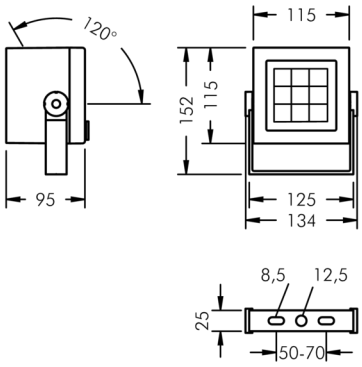

Superlight Nano 3

8 819 055 159

9 × 2,5 W, 1533 lm, 4000 K neutral white, DALI, wide beam 31°

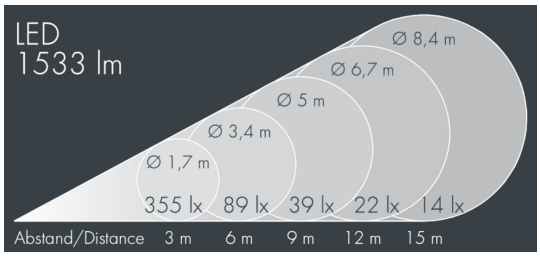

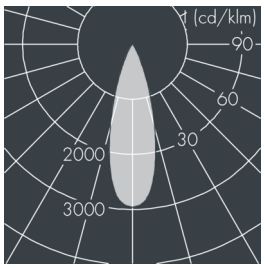

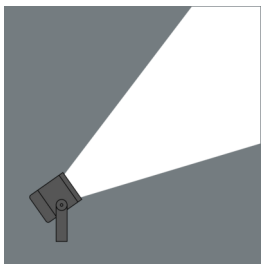

Customized solutions and modifications are possible: Special RAL, DB or NCS colours as polyester powder coat, luminaires in 2700 K and other colour temperatures and versions for high ambient temperature.

Specification text

housing made of die-cast aluminum AlSi12, polyester powder coated by high-quality and UV-stabilized coating process, Colour: silver grey , all exterior parts are stainless steel, tempered safety glass, anti-reflective coating from 1 side, dark screenprint, silicon gasket, powder coated die cast zinc mounting bracket with tilt scale: 2 drilled holes Ø 9 mm, spacing 60 mm, 1 centre hole Ø 13 mm, tilt range: 120°, cable gland: M20, connecting terminal: 5 pole, highly efficient optics made of transparent thermoplastic for precise lighting tasks , integral driver (DALI), CRI > 80, max 2 SDCM,
service life L90/B10 > 50.000 h, Beam angle (FWHM): 31°, luminous flux: 1533 lm, wattage: 22 W, delivered lumens 69 lm/W, protection type IP67, protection class I, impact resistance IK08, windage area 0,013 m², dimensions (L×H×W): 115 × 95 × 115 mm, weight 1.5 kg

The modular luminaire design makes the replacement of components possible. The product meets the demands of the applicable EU guidelines and product safety regulations and bears the CE and ENEC marks.

IP67 IK08

Specification

Wattage	22 W	Beam angle (FWHM)	31°
Delivered lumens	69 lm/W	Housing colour	silver grey
Light source	LED 4000 K	Power supply cable	Ø 6 – 13 mm
Color Rendering Index	CRI > 80	Protection type	IP67
Colour tolerance	max 2 SDCM	Protection class	I
Lifetime ta 25° C	L90/B10 > 50.000 h	Impact resistance	IK08
Control gear	DALI	Windage area	0,013m²
Input voltage AC	110 – 240 V	Dimensions	115 × 95 × 115 mm
Input voltage DC	190 – 255 V	Weight	1,50 kg
Voltage protection	3 kV L/N | 4 kV L/PE	Max. ambient temperature ta	35°
Luminaires per B16A / C16A	50 / 85		