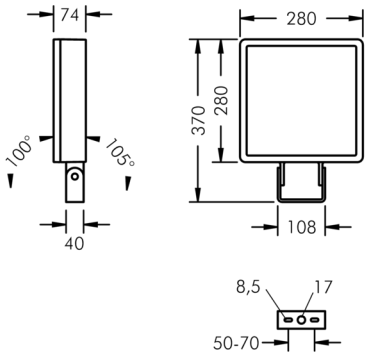

Superlight LED 3

8 887 046 149

2 × 45 W, 8144 lm, 3000 K warm white, DALI, asymmetrical 43°

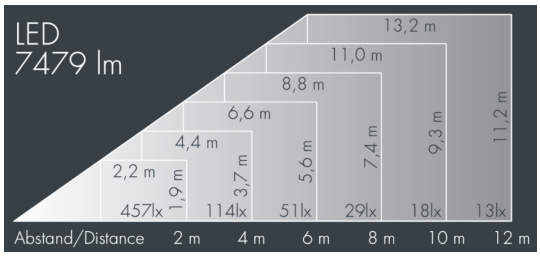

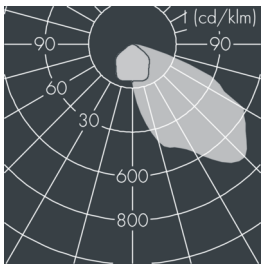

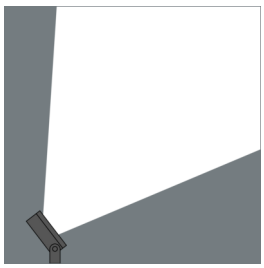

Customized solutions and modifications are possible: Special RAL, DB or NCS colours as polyester powder coat, luminaires in 2700 K and other colour temperatures and versions for high ambient temperature.

Specification text

housing made of die-cast aluminum AlSi12, polyester powder coated by high-quality and UV-stabilized coating process, Colour: black RAL 7021, all exterior parts are stainless steel, tempered safety glass, anti-reflective coating from 1 side, dark screenprint, silicon gasket, closure with 4 stainless steel screws, mounting bracket powder coated aluminum: 2 drilled holes Ø 8.5 mm, spacing 50-70 mm, 1 centre hole Ø 17 mm, tilt range: 205°, cable gland: M20, connecting terminal: 5 pole, highly efficient reflector, integral driver (DALI), CRI > 85, max 2 SDCM, service life L90/B10 > 50.000 h, luminous flux: 8144 lm, wattage: 88 W, delivered lumens 93 lm/W, protection type IP67, protection class I, impact resistance IK08, windage area 0,08 m², dimensions (L×H×W): 280 × 74 × 280 mm, weight 5.8 kg

The modular luminaire design makes the replacement of components possible. The product meets the demands of the applicable EU guidelines and product safety regulations and bears the CE and ENEC marks.

IP67 IK08

Specification

Wattage	88 W	Housing colour	black RAL 7021
Delivered lumens	93 lm/W	Power supply cable	Ø 6 – 13 mm
Light source	LED 3000 K	Protection type	IP67
Color Rendering Index	CRI > 85	Protection class	I
Colour tolerance	max 2 SDCM	Impact resistance	IK08
Lifetime ta 25° C	L90/B10 > 50.000 h	Windage area	0,08m²
Control gear	DALI	Dimensions	280 × 74 × 280 mm
Input voltage AC	195 – 278 V	Weight	5,80 kg
Input voltage DC	210 – 230 V	Max. ambient temperature ta	40°
Voltage protection	6 kV L/N | 10 kV L/PE		
Luminaires per B16A / C16A	11 / 14		