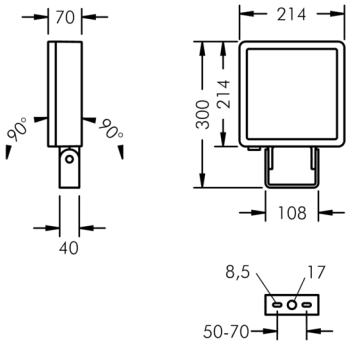

Superlight LED 2

8 886 045 059

40 W, 4267 lm, 4000 K neutral white,
wide beam 92° / 102°

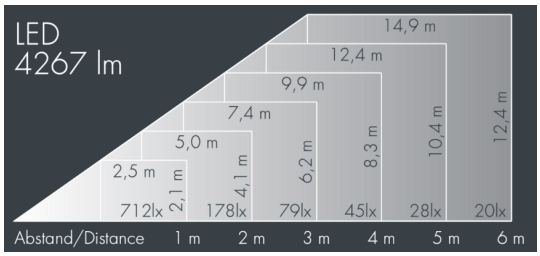

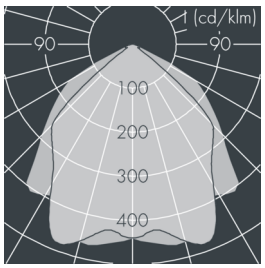

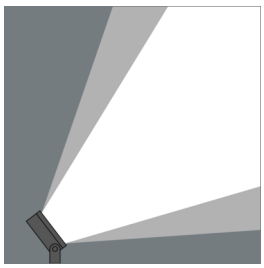

Customized solutions and modifications are possible: Special RAL, DB or NCS colours as polyester powder coat, luminaires in 2700 K and other colour temperatures and versions for high ambient temperature.

Specification text

housing made of die-cast aluminum AlSi12, polyester powder coated by high-quality and UV-stabilized coating process, Colour: black RAL 7021, all exterior parts are stainless steel, tempered safety glass, anti-reflective coating from 1 side, dark screenprint, silicon gasket, closure with 4 stainless steel screws, mounting bracket powder coated aluminum: 2 drilled holes Ø 8.5 mm, spacing 50-70 mm, 1 centre hole Ø 17 mm, tilt range: 180°, cable gland: M20, connecting terminal: 3 pole, highly efficient aluminum reflector with satin finish, integral driver (AC/DC), CRI > 80, max 2 SDCM, service life L90/B10 > 50.000 h, Beam angle (FWHM): 92° / 102°, luminous flux: 4267 lm, wattage: 40 W, delivered lumens 106 lm/W, protection type IP67, protection class I, impact resistance IK08, windage area 0,047 m², dimensions (L×H×W): 215 × 70 × 215 mm, weight 3 kg

The modular luminaire design makes the replacement of components possible. The product meets the demands of the applicable EU guidelines and product safety regulations and bears the CE and ENEC marks.

IP67 IK08

Specification

Wattage	40 W	Beam angle (FWHM)	92° / 102°
Delivered lumens	106 lm/W	Housing colour	black RAL 7021
Light source	LED 4000 K	Power supply cable	Ø 6 – 13 mm
Color Rendering Index	CRI > 80	Protection type	IP67
Colour tolerance	max 2 SDCM	Protection class	I
Lifetime ta 25° C	L90/B10 > 50.000 h	Impact resistance	IK08
Control gear	on / off	Windage area	0,047m²
Input voltage AC	220 – 240 V	Dimensions	215 × 70 × 215 mm
Input voltage DC	195 – 255 V	Weight	3,00 kg
Voltage protection	4 kV L/N | 2 kV L/PE	Max. ambient temperature ta	40°
Luminaires per B16A / C16A	30 / 51		