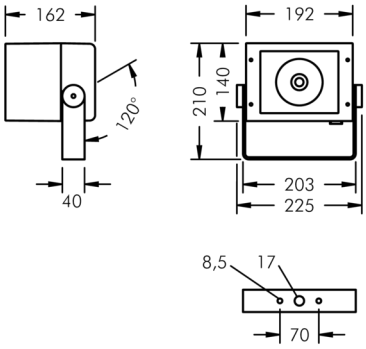

Superlight Compact LED

8 890 046 249

48 W, 4390 lm, 3000 K warm white, 1-10V, medium wide beam 18°

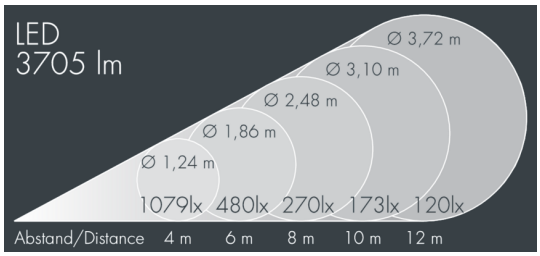

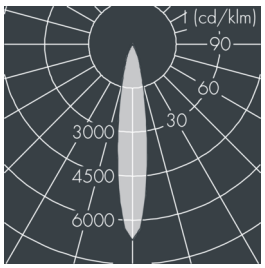

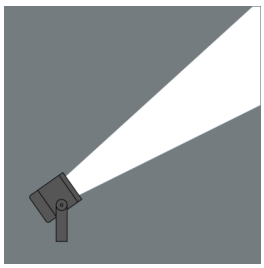

Customized solutions and modifications are possible: Special RAL, DB or NCS colours as polyester powder coat, luminaires in 2700 K and other colour temperatures and versions for high ambient temperature.

Specification text

housing made of die-cast aluminum AlSi12, polyester powder coated by high-quality and UV-stabilized coating process, Colour: black RAL 7021, all exterior parts are stainless steel, tempered safety glass, anti-reflective coating from 1 side, dark screenprint, silicon gasket, closure with 4 stainless steel screws, powder coated aluminum mounting bracket with tilt scale: 2 drilled holes Ø 8.5 mm, spacing 70 mm, 1 centre hole Ø 17 mm, tilt range: 120°, cable gland: M20, connecting terminal: 5 pole, highly efficient anodized rotationally symmetrical reflector with matt finish, integral 1-10 V driver, CRI > 80, max 2 SDCM, service life L90/B10 > 50.000 h, Beam angle (FWHM): 18°, luminous flux: 4390 lm, wattage: 48 W, delivered lumens 91 lm/W, protection type IP67, protection class I, impact resistance IK08, windage area 0,04 m², dimensions (L×H×W): 140 × 163 × 190 mm, weight 2.6 kg

The modular luminaire design makes the replacement of components possible. The product meets the demands of the applicable EU guidelines and product safety regulations and bears the CE and ENEC marks.

IP67 IK08

Specification

Wattage	48 W	Beam angle (FWHM)	18°
Delivered lumens	91 lm/W	Housing colour	black RAL 7021
Light source	LED 3000 K	Power supply cable	Ø 6 – 13 mm
Color Rendering Index	CRI > 80	Protection type	IP67
Colour tolerance	max 2 SDCM	Protection class	I
Lifetime ta 25° C	L90/B10 > 50.000 h	Impact resistance	IK08
Control gear	1-10V	Windage area	0,04m²
Input voltage AC	110 – 240 V	Dimensions	140 × 163 × 190 mm
Input voltage DC	195 – 255 V	Weight	2,60 kg
Voltage protection	3 kV L/N | 4 kV L/PE	Max. ambient temperature ta	40°
Luminaires per B16A / C16A	30 / 51		