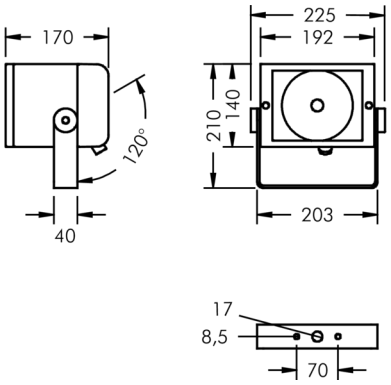

Superlight Compact

8 861 067 069

For ceramic metal halide lamps (HIT-CE)

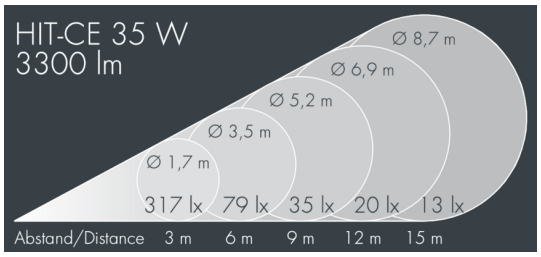

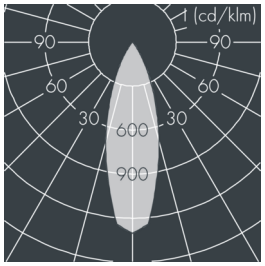

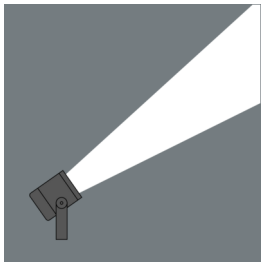

Customized solutions and modifications are possible: Special RAL, DB or NCS colours as polyester powder coat, luminaires in 2700 K and other colour temperatures and versions for high ambient temperature.

Specification text

housing made of die-cast aluminum AlSi12, polyester powder coated by high-quality and UV-stabilized coating process, Colour: white RAL 9002, all exterior parts are stainless steel, tempered safety glass, anti-reflective coating from 1 side, silicon gasket, closure with 2 stainless steel screws, powder coated aluminum mounting bracket with tilt scale: 2 drilled holes Ø 8.5 mm, spacing 70 mm, 1 centre hole Ø 17 mm, tilt range: 120°, cable gland: PG 11, connecting terminal: 3 pole, rotationally symmetrical satin finish aluminum reflector, integral ballast and ignitor, LPF, HPF available on request,
Beam angle (FWHM): 32°, luminous flux: 3300 lm, wattage: 35 W, delivered lumens 79 lm/W, protection type IP65, protection class I, impact resistance IK08, windage area 0,04 m², dimensions (L×H×W): 170 × 245 × 192 mm, weight 0.62 kg

The modular luminaire design makes the replacement of components possible. The product meets the demands of the applicable EU guidelines and product safety regulations and bears the CE mark.

IP65 IK08

Specification

Wattage	35 W	Beam angle (FWHM)	32°
Delivered lumens	79 lm/W	Housing colour	white RAL 9002
Control gear	on / off	Power supply cable	Ø 5 – 13 mm
		Protection type	IP65
		Protection class	I
		Impact resistance	IK08
		Windage area	0,04m²
		Dimensions	170 × 245 × 192 mm
		Weight	0,62 kg