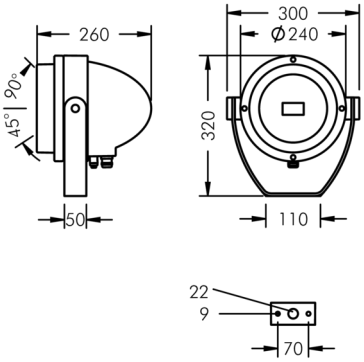

Nightspot B

8 988 045 709

41 W, 3772 lm, 4000 K neutral white, 1-10V,
Street Optic 47° / 126°

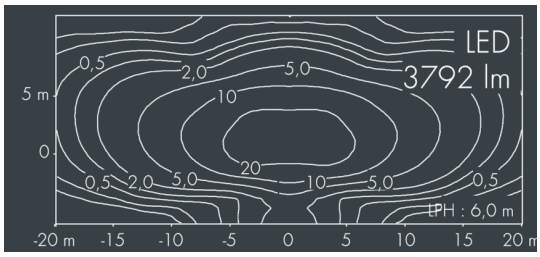

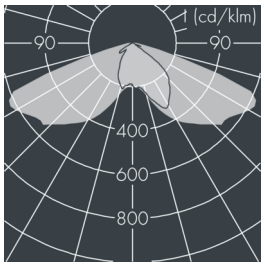

Customized solutions and modifications are possible: Special RAL, DB or NCS colours as polyester powder coat, luminaires in 2700 K and other colour temperatures and versions for high ambient temperature.

Specification text

housing made of corrosion-resistant die-cast aluminum AlSi12, polyester powder coated by high-quality and UV-stabilized coating process, Colour: black RAL 7021, all exterior parts are stainless steel, tempered safety glass, anti-reflective coating from 1 side, silicon gasket, closure with 4 stainless steel screws, powder coated aluminum mounting bracket with tilt scale: 2 drilled holes Ø 9 mm, spacing 70 mm, 1 centre hole Ø 22 mm, tilt range: 135°, cable gland: M20, connecting terminal: 5 pole, lens for batwing light distribution made of highly efficient optical silicon, integral driver (dimmable 1-10V), CRI > 80, max 3 SDCM, service life L80/B20 > 50.000 h, Beam angle (FWHM): 47° / 126°, luminous flux: 3772 lm, wattage: 41 W, delivered lumens 92 lm/W, protection type IP67, protection class II, impact resistance IK08, windage area 0,05 m², weight 5.4 kg

The modular luminaire design makes the replacement of components possible. The product meets the demands of the applicable EU guidelines and product safety regulations and bears the CE and ENEC marks.

IP 67 IK 08

Specification

Wattage	41 W	Beam angle (FWHM)	47° / 126°
Delivered lumens	92 lm/W	Housing colour	black RAL 7021
Light source	LED 4000 K	Power supply cable	Ø 8 – 15 mm
Color Rendering Index	CRI > 80	Protection type	IP67
Colour tolerance	max 3 SDCM	Protection class	II
Lifetime ta 25° C	L80/B20 > 50.000 h	Impact resistance	IK08
Control gear	1-10V	Windage area	0,05m²
Input voltage AC	110 – 240 V	Weight	5,40 kg
Input voltage DC	190 – 250 V	Max. ambient temperature ta	40°
Voltage protection	4 kV L/N | 5 kV L/PE		
Luminaires per B16A / C16A	30 / 51		