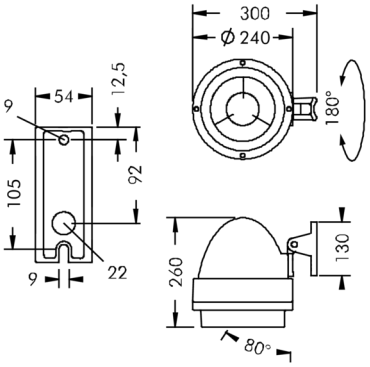

Nightspot B

8 986 246 149

54 W, 4511 lm, 3000 K warm white, DALI, medium wide beam 31°

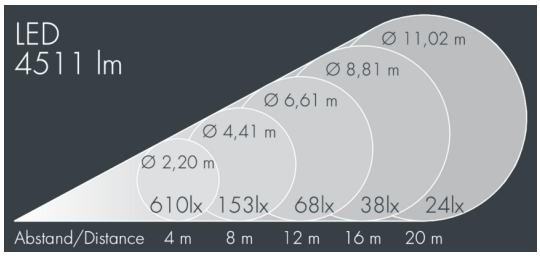

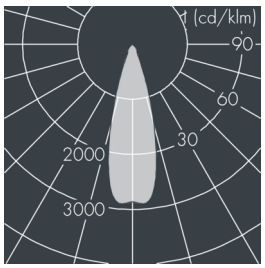

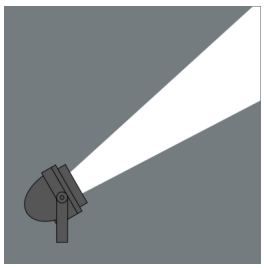

Customized solutions and modifications are possible: Special RAL, DB or NCS colours as polyester powder coat, luminaires in 2700 K and other colour temperatures and versions for high ambient temperature.

Specification text

housing made of corrosion-resistant die-cast aluminum AlSi12, polyester powder coated by high-quality and UV-stabilized coating process, Colour: black RAL 7021, all exterior parts are stainless steel, tempered safety glass, anti-reflective coating from 1 side, silicon gasket, closure with 4 stainless steel screws, for installation on poles Ø 60-100mm, adjustable aluminum mounting base, powder coated: 2 drilled holes Ø 9mm, spacing 105mm, 1 centre hole Ø 22mm, tilt range: 80°, cable gland: M20, connecting terminal: 5 pole, highly efficient anodized aluminum reflector, with built-in secondary reflector (narrow beam/medium wide beam) for optimal visual comfort and high efficiency, for glare control and reduction of spill light, inegral, dimmable driver (DALI), CRI > 80, max 2 SDCM,
service life L90/B10 > 50.000 h, Beam angle (FWHM): 31°, luminous flux: 4511 lm, wattage: 54 W, delivered lumens 83 lm/W, protection type IP67, protection class I, impact resistance IK08, windage area 0,05 m², dimensions: Ø 240 mm, width 260 mm, weight 4.9 kg

The modular luminaire design makes the replacement of components possible. The product meets the demands of the applicable EU guidelines and product safety regulations and bears the CE and ENEC marks.

IP67 IK08

Specification

Wattage	54 W	Beam angle (FWHM)	31°
Delivered lumens	83 lm/W	Housing colour	black RAL 7021
Light source	LED 3000 K	Power supply cable	Ø 6 – 10 mm
Color Rendering Index	CRI > 80	Protection type	IP67
Colour tolerance	max 2 SDCM	Protection class	I
Lifetime ta 25° C	L90/B10 > 50.000 h	Impact resistance	IK08
Control gear	DALI	Windage area	0,05m²
Input voltage AC	220 – 240 V	Dimensions	Ø 240 mm, width 260 mm
Input voltage DC	195 – 255 V	Weight	4,90 kg
Voltage protection	4 kV L/N | 2 kV L/PE	Max. ambient temperature ta	35°
Luminaires per B16A / C16A	27 / 46		