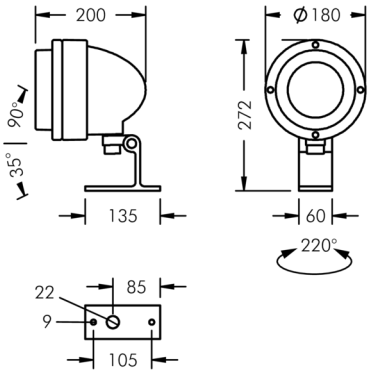

Nightspot A2

8 983 155 219

28 W, 2492 lm, 4000 K neutral white, 1-10V, narrow beam 11°

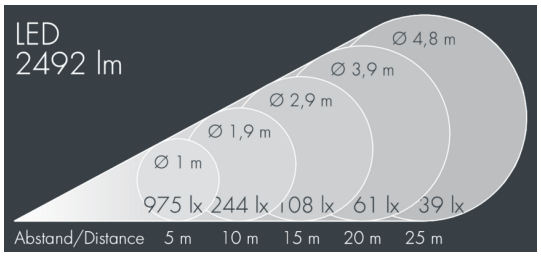

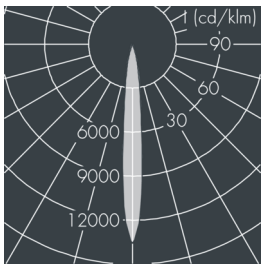

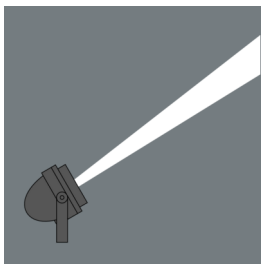

Customized solutions and modifications are possible: Special RAL, DB or NCS colours as polyester powder coat, luminaires in 2700 K and other colour temperatures and versions for high ambient temperature.

Specification text

housing made of corrosion-resistant die-cast aluminum AlSi12, polyester powder coated by high-quality and UV-stabilized coating process, Colour: silver grey , all exterior parts are stainless steel, tempered safety glass, anti-reflective coating from 1 side, silicon gasket, closure with 4 stainless steel screws, powder coated aluminum mounting base adjustable: 2 drilled holes Ø 9 mm, spacing 105 mm, 1 centre hole Ø 22 mm, tilt range: 125°, cable gland: M20, connecting terminal: 5 pole, highly efficient anodized aluminum reflector, with built-in secondary reflector (narrow beam/medium wide beam) for optimal visual comfort and high efficiency, for glare control and reduction of spill light, integral driver (dimmable 1-10V), CRI > 80, max 2 SDCM, service life L90/B10 > 50.000 h, Beam angle (FWHM): 11°, luminous flux: 2492 lm, wattage: 28 W, delivered lumens 89 lm/W, protection type IP67, protection class I, impact resistance IK08, windage area 0,035 m², dimensions: Ø 180 mm, width 200 mm, weight 2.5 kg

The modular luminaire design makes the replacement of components possible. The product meets the demands of the applicable EU guidelines and product safety regulations and bears the CE mark.

IP67 IK08

Specification

Wattage	28 W	Beam angle (FWHM)	11°
Delivered lumens	89 lm/W	Housing colour	silver grey
Light source	LED 4000 K	Power supply cable	Ø 8 – 11 mm
Color Rendering Index	CRI > 80	Protection type	IP67
Colour tolerance	max 2 SDCM	Protection class	I
Lifetime ta 25° C	L90/B10 > 50.000 h	Impact resistance	IK08
Control gear	1-10V	Windage area	0,035m²
		Dimensions	Ø 180 mm, width 200 mm
		Weight	2,50 kg
		Max. ambient temperature ta	35°