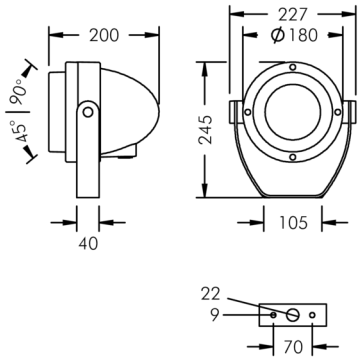

Nightspot A2

8 983 066 059

28 W, 2066 lm, 3000 K warm white,
wide beam 53°

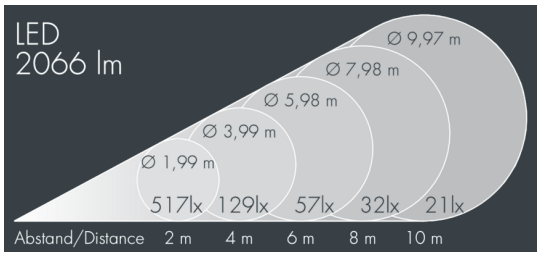

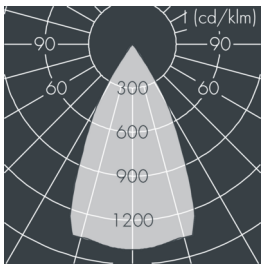

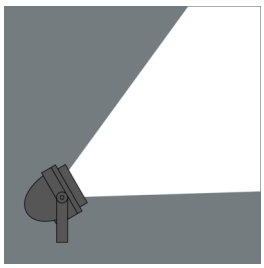

Customized solutions and modifications are possible: Special RAL, DB or NCS colours as polyester powder coat, luminaires in 2700 K and other colour temperatures and versions for high ambient temperature.

Specification text

housing made of corrosion-resistant die-cast aluminum AlSi12, polyester powder coated by high-quality and UV-stabilized coating process, Colour: white RAL 9002, all exterior parts are stainless steel, tempered safety glass, anti-reflective coating from 1 side, silicon gasket, closure with 4 stainless steel screws, powder coated aluminum mounting bracket with tilt scale: 2 drilled holes Ø 9 mm, spacing 70 mm, 1 centre hole Ø 22 mm, tilt range: 135°, cable gland: M20, connecting terminal: 3 pole, highly efficient anodized aluminum reflector, with built-in secondary reflector (narrow beam/medium wide beam) for optimal visual comfort and high efficiency, for glare control and reduction of spill light, integral driver (AC/DC), CRI > 80, max 2 SDCM, service life L90/B10 > 50.000 h, Beam angle (FWHM): 53°, luminous flux: 2066 lm, wattage: 28 W, delivered lumens 75 lm/W, protection type IP67, protection class I, impact resistance IK08, windage area 0,035 m², dimensions: Ø 180 mm, width 200 mm, weight 2.9 kg

The modular luminaire design makes the replacement of components possible. The product meets the demands of the applicable EU guidelines and product safety regulations and bears the CE mark.

IP67 IK08

Specification

Wattage	28 W	Beam angle (FWHM)	53°
Delivered lumens	75 lm/W	Housing colour	white RAL 9002
Light source	LED 3000 K	Power supply cable	Ø 8 – 15 mm
Color Rendering Index	CRI > 80	Protection type	IP67
Colour tolerance	max 2 SDCM	Protection class	I
Lifetime ta 25° C	L90/B10 > 50.000 h	Impact resistance	IK08
Control gear	on / off	Windage area	0,035m²
Input voltage AC	220 – 240 V	Dimensions	Ø 180 mm, width 200 mm
Input voltage DC	190 – 245 V	Weight	2,90 kg
Voltage protection	2 kV L/N | 4 kV L/PE	Max. ambient temperature ta	35°