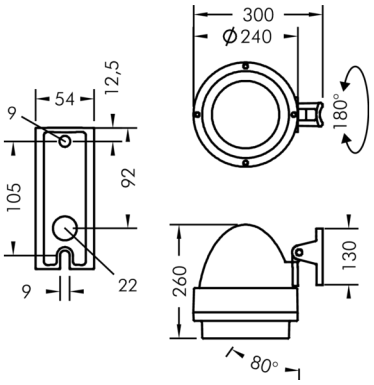

Nightspot B

8 952 252 009

For und ceramic metal halide lamps (HIT-CE)

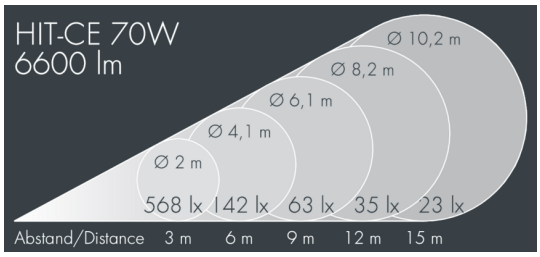

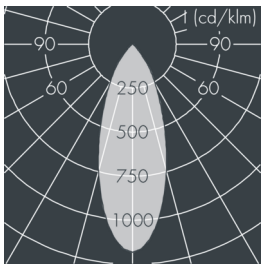

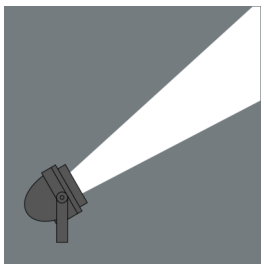

Customized solutions and modifications are possible: Special RAL, DB or NCS colours as polyester powder coat, luminaires in 2700 K and other colour temperatures and versions for high ambient temperature.

Specification text

housing made of corrosion-resistant die-cast aluminum AlSi12, polyester powder coated by high-quality and UV-stabilized coating process, Colour: silver grey , all exterior parts are stainless steel, tempered safety glass, anti-reflective coating from 1 side, silicon gasket, closure with 4 stainless steel screws, for installation on poles Ø 60-100mm, adjustable aluminum mounting base, powder coated: 2 drilled holes Ø 9mm, spacing 105mm, 1 centre hole Ø 22mm, tilt range: 80°, cable gland: M20, connecting terminal: 3 pole, highly efficient anodized aluminum reflector, with built-in secondary reflector (narrow beam/medium wide beam) for optimal visual comfort and high efficiency, for glare control and reduction of spill light, integral ballast and ignitor, LPF, HPF available on request,
Beam angle (FWHM): 38°, luminous flux: 6600 lm, wattage: 70 W, delivered lumens 84 lm/W, protection type IP65, protection class I, impact resistance IK08, windage area 0,05 m², dimensions: Ø 230 mm, width 250 mm, weight 6.2 kg

The modular luminaire design makes the replacement of components possible. The product meets the demands of the applicable EU guidelines and product safety regulations and bears the CE mark.

IP65 IK08

Specification

Wattage	70 W	Beam angle (FWHM)	38°
Delivered lumens	84 lm/W	Housing colour	silver grey
Control gear	on / off	Power supply cable	Ø 8 – 15 mm
		Protection type	IP65
		Protection class	I
		Impact resistance	IK08
		Windage area	0,05m²
		Dimensions	Ø 230 mm, width 250 mm
		Weight	6,20 kg