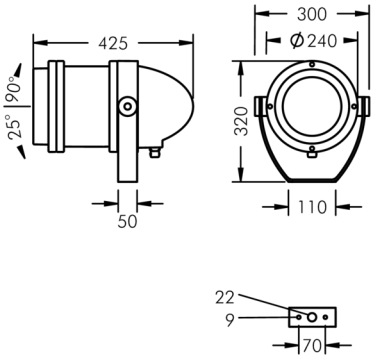

Nightspot B Gobo Projector

8 987 054 549

47 W, 1095 lm, 6500 K cold white,
85 mm focal length 20°

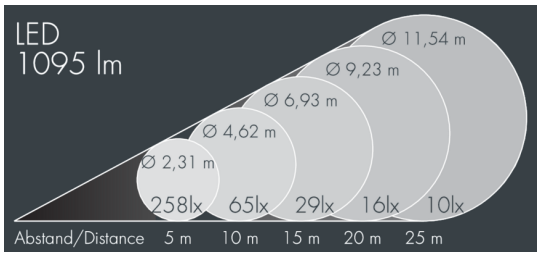

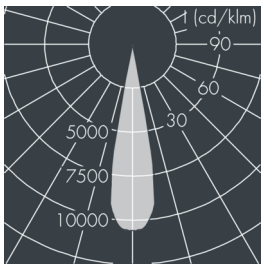

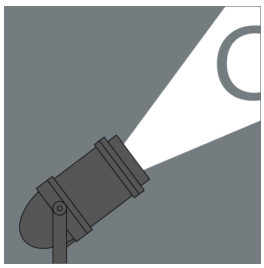

Customized solutions and modifications are possible: Special RAL, DB or NCS colours as polyester powder coat, luminaires in 2700 K and other colour temperatures and versions for high ambient temperature.

Specification text

housing made of extruded aluminum and corrosion-resistant die-cast aluminum AlSi12, polyester powder coated by high-quality and UV-stabilized coating process, Colour: silver grey , all exterior parts are stainless steel, tempered safety glass, anti-reflective coating from 1 side, silicon gasket, closure with 4 stainless steel screws, powder coated aluminum mounting bracket with tilt scale: 2 drilled holes Ø 9 mm, spacing 70 mm, 1 centre hole Ø 22 mm, tilt range: 105°, cable gland: M20, connecting terminal: 3 pole, focusable projection lens for precise light control and sharp-edged image projections, integral driver (AC/DC), CRI > 70, service life L70/B > 50.000 h, luminous flux: 1095 lm, wattage: 47 W, protection type IP67, protection class II, impact resistance IK08, windage area 0,085 m², dimensions (L×H×W): 425 × 320 × 300 mm, weight 8.1 kg

The modular luminaire design makes the replacement of components possible. The product meets the demands of the applicable EU guidelines and product safety regulations and bears the CE mark.

IP67 IK08

Specification

Wattage	47 W	Housing colour	silver grey
Light source	LED 6500 K	Protection type	IP67
Color Rendering Index	CRI > 70	Protection class	II
Lifetime ta 25° C	L70/B > 50.000 h	Impact resistance	IK08
Control gear	on / off	Windage area	0,085m²
		Dimensions	425 × 320 × 300 mm
		Weight	8,10 kg