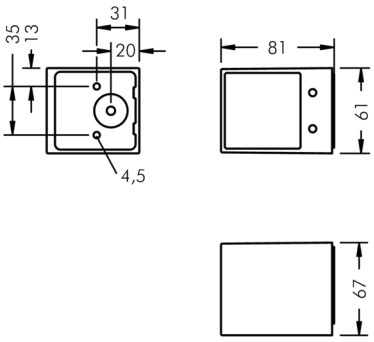

Nanocube

8 308 145 049

5 W, 347 lm, 4000 K neutral white,
medium wide beam 37°

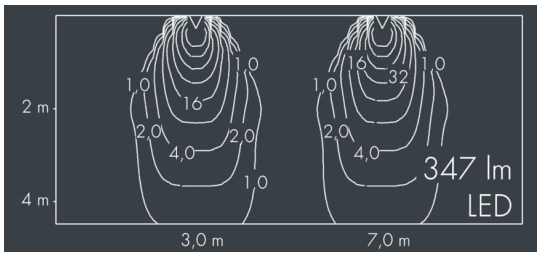

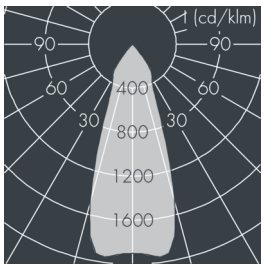

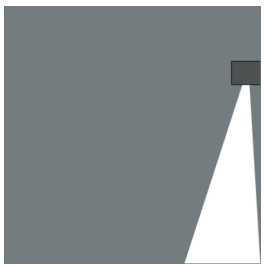

Customized solutions and modifications are possible: Special RAL, DB or NCS colours as polyester powder coat, luminaires in 2700 K and other colour temperatures and versions for high ambient temperature.

Specification text

housing made of corrosion-resistant die-cast aluminum AlSi12, polyester powder coated by high-quality and UV-stabilized coating process, Colour: black RAL 7021, all exterior parts are stainless steel, tempered safety glass, anti-reflective coating from 1 side, dark screenprint, silicon gasket, housing locked with a grub screw, mounting: 2 drilled holes Ø 4.5 mm, spacing 35 mm, cable gland:
cable entry for recessed cable Ø 7-10 mm , connecting terminal: 3 pole, highly efficient faceted rotationally symmetrical reflector, integral driver (AC/DC), CRI > 80, max 3 SDCM, service life L90/B10 > 50.000 h, Beam angle (FWHM): 37°, luminous flux: 347 lm, wattage: 5 W, delivered lumens 64 lm/W, protection type IP65, protection class I, impact resistance IK07, windage area 0,005 m², dimensions (L×H×W): 81 × 67 × 61 mm, weight 0.47 kg

The modular luminaire design makes the replacement of components possible. The product meets the demands of the applicable EU guidelines and product safety regulations and bears the CE mark.

IP65 IK07

Specification

Wattage	5 W	Beam angle (FWHM)	37°
Delivered lumens	64 lm/W	Housing colour	black RAL 7021
Light source	LED 4000 K	Protection type	IP65
Color Rendering Index	CRI > 80	Protection class	I
Colour tolerance	max 3 SDCM	Impact resistance	IK07
Lifetime ta 25° C	L90/B10 > 50.000 h	Windage area	0,005m²
Control gear	on / off	Dimensions	81 × 67 × 61 mm
Input voltage AC	100 – 240 V	Weight	0,47 kg
Voltage protection	1 kV L/N | 1 kV L/PE	Max. ambient temperature ta	45°
Luminaires per B16A / C16A	154 / 154		