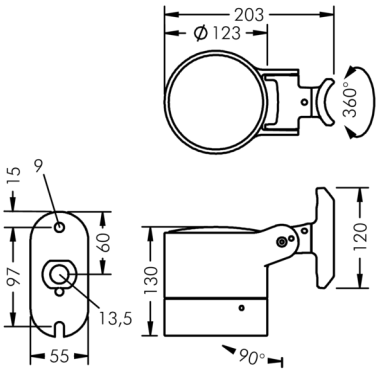

Multispot 2

8 226 448 169

0 W, 2200 K warm white, DALI,
Vario Optic

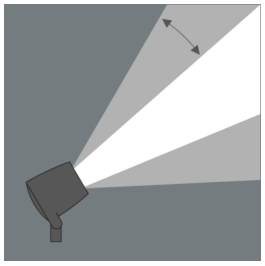

Customized solutions and modifications are possible: Special RAL, DB or NCS colours as polyester powder coat, luminaires in 2700 K and other colour temperatures and versions for high ambient temperature.

Specification text

housing made of corrosion-resistant die-cast aluminum AlSi12, polyester powder coated by high-quality and UV-stabilized coating process, Colour: black RAL 7021, all exterior parts are stainless steel, 2 tempered safety glasses: waterproof space for optical film and honeycomb louvres, dark screenprint, silicon gasket, closure with 2 stainless steel screws, for installation on poles Ø 60 - 100 mm, tiltable base made of powder coated aluminium, 2 drilled holes Ø 9 mm, spacing 97 mm, 1 centre hole Ø 13.5 mm, tilt range: 90°, 360° adjustable, cable gland: M20, connecting terminal: 5 pole, PMMA lens, integral driver (AC/DC), wattage: 0 W, protection type IP65, protection class I, impact resistance IK08, windage area 0,049 m², dimensions (L×H×W): 200 × 254 × 175 mm, weight 2.4 kg

The modular luminaire design makes the replacement of components possible. The product meets the demands of the applicable EU guidelines and product safety regulations and bears the CE mark.

IP65 IK08

Specification

Wattage	0 W	Housing colour	black RAL 7021
Light source	LED 2200 K	Protection type	IP65
Control gear	DALI	Protection class	I
		Impact resistance	IK08
		Windage area	0,049m²
		Dimensions	200 × 254 × 175 mm
		Weight	2,40 kg