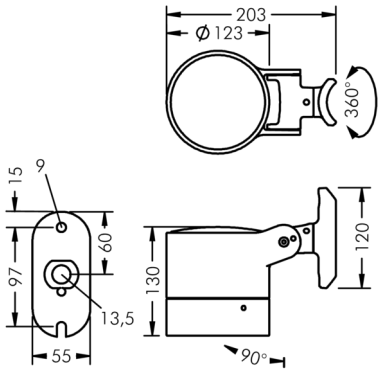


## Multispot 2

8 226 047 019

15 W, 1225 lm, 2700 K warm white,
narrow beam 9°

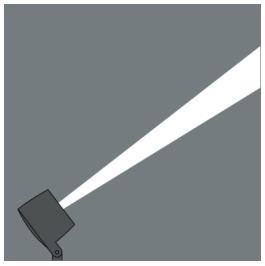

Customized solutions and modifications are possible: Special RAL, DB or NCS colours as polyester powder coat, luminaires in 2700 K and other colour temperatures and versions for high ambient temperature.

### Specification text

housing made of corrosion-resistant die-cast aluminum AlSi12, polyester powder coated by high-quality and UV-stabilized coating process, Colour: black RAL 7021, all exterior parts are stainless steel, 2 tempered safety glasses: waterproof space for optical film and honeycomb louvres, dark screenprint, silicon gasket, closure with 2 stainless steel screws, for installation on poles Ø 60 - 100 mm, tiltable base made of powder coated aluminium, 2 drilled holes Ø 9 mm, spacing 97 mm, 1 centre hole Ø 13.5 mm, tilt range: 90°, 360° adjustable, cable gland: M20, connecting terminal: 3 pole, PMMA lens, integral driver (AC/DC), CRI > 80, max 2 SDCM, service life L80/B10 > 50.000 h, Beam angle (FWHM): 9°, luminous flux: 1225 lm, wattage: 15 W, delivered lumens 84 lm/W, protection type IP65, protection class I, impact resistance IK08, windage area 0,0234 m², dimensions: Ø 123 mm, width 130 mm, weight 2 kg

The modular luminaire design makes the replacement of components possible. The product meets the demands of the applicable EU guidelines and product safety regulations and bears the CE mark.

IP65 IK08

## Specification

| | | | |
|---|---|---|---|
| Wattage | 15 W | Beam angle (FWHM) | 9° |
| Delivered lumens | 84 lm/W | Housing colour | black RAL 7021 |
| Light source | LED 2700 K | Power supply cable | Ø 6 – 13 mm |
| Color Rendering Index | CRI > 80 | Protection type | IP65 |
| Colour tolerance | max 2 SDCM | Protection class | I |
| Lifetime ta 25° C | L80/B10 > 50.000 h | Impact resistance | IK08 |
| Control gear | on / off | Windage area | 0,0234m² |
| Input voltage AC | 220 – 240 V | Dimensions | Ø 123 mm, width 130 mm |
| Input voltage DC | 220 – 240 V | Weight | 2,00 kg |
| Voltage protection | 2 kV L/N \| 2 kV L/PE | Max. ambient temperature ta | 40° |
| Luminaires per B16A / C16A | 50 / 50 | | |