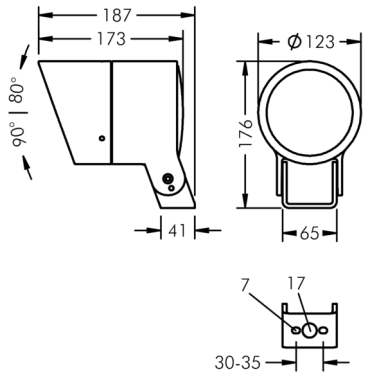

Multispot 2

8 222 556 059

15 W, 1106 lm, 3000 K warm white,
wide beam 52°

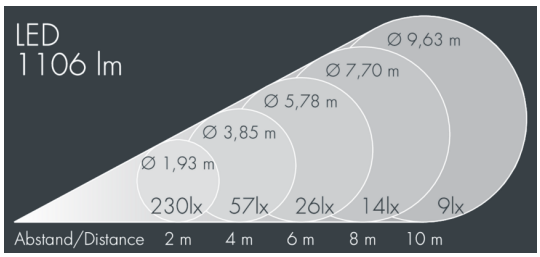

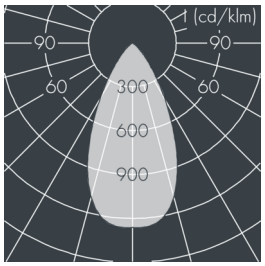

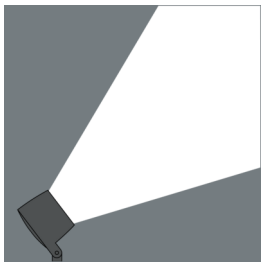

Customized solutions and modifications are possible: Special RAL, DB or NCS colours as polyester powder coat, luminaires in 2700 K and other colour temperatures and versions for high ambient temperature.

Specification text

housing made of corrosion-resistant die-cast aluminum AlSi12, polyester powder coated by high-quality and UV-stabilized coating process, Colour: silver grey , all exterior parts are stainless steel, 2 tempered safety glasses: waterproof space for optical film and honeycomb louvres, dark screenprint, silicon gasket, closure with 2 stainless steel screws, mounting bracket: 2 drilled holes Ø 7 mm, spacing 32 mm, 1 centre hole Ø 17 mm, tilt range: 170°, cable gland: M20, connecting terminal: 3 pole, PMMA lens, integral driver (AC/DC), CRI > 80, max 2 SDCM, service life L80/B10 > 50.000 h, Beam angle (FWHM): 52°, luminous flux: 1106 lm, wattage: 15 W, delivered lumens 76 lm/W, protection type IP65, protection class I, impact resistance IK08, windage area 0,0234 m², dimensions: Ø 123 mm, width 173 mm, weight 2 kg

The modular luminaire design makes the replacement of components possible. The product meets the demands of the applicable EU guidelines and product safety regulations and bears the CE mark.

IP65 IK08

Specification

Wattage	15 W	Beam angle (FWHM)	52°
Delivered lumens	76 lm/W	Housing colour	silver grey
Light source	LED 3000 K	Power supply cable	Ø 6 – 13 mm
Color Rendering Index	CRI > 80	Protection type	IP65
Colour tolerance	max 2 SDCM	Protection class	I
Lifetime ta 25° C	L80/B10 > 50.000 h	Impact resistance	IK08
Control gear	on / off	Windage area	0,0234m²
Input voltage AC	220 – 240 V	Dimensions	Ø 123 mm, width 173 mm
Input voltage DC	220 – 240 V	Weight	2,00 kg
Voltage protection	2 kV L/N | 2 kV L/PE	Max. ambient temperature ta	40°
Luminaires per B16A / C16A	50 / 50		