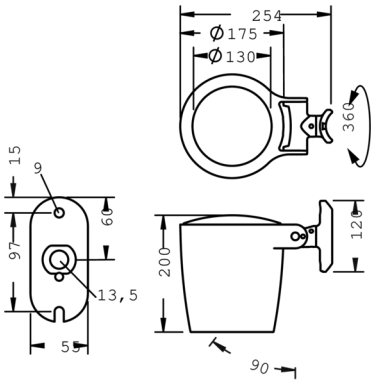

Monospot 3

8 907 256 199

36 W, 2938 lm, 3000 K warm white, DALI, asymmetrical 18°

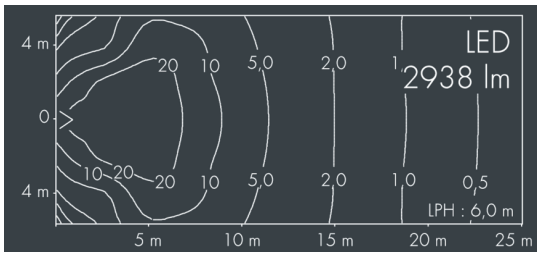

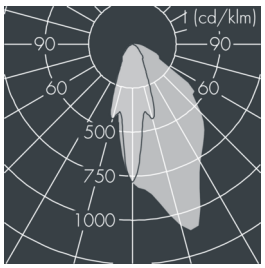

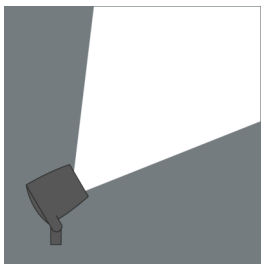

Customized solutions and modifications are possible: Special RAL, DB or NCS colours as polyester powder coat, luminaires in 2700 K and other colour temperatures and versions for high ambient temperature.

Specification text

housing made of corrosion-resistant die-cast aluminum AlSi12, polyester powder coated by high-quality and UV-stabilized coating process, Colour: silver grey RAL 9006, all exterior parts are stainless steel, tempered safety glass, anti-reflective coating from 1 side, dark screenprint, silicon gasket, closure with 3 stainless steel screws, for installation on poles Ø 60 - 100 mm, tiltable base made of powder coated aluminum, 2 drilled holes Ø 9 mm, spacing 95 mm, 1 centre hole Ø 13.5 mm, tilt range: 90°, 360° adjustable, cable gland: M20, connecting terminal: 5 pole, high effiency asymmetrical aluminum reflector, inegral, dimmable driver (DALI), CRI > 80, max 2 SCDM, service life L90/B10 > 50.000 h, luminous flux: 2938 lm, wattage: 36 W, delivered lumens 83 lm/W, protection type IP67, protection class II, impact resistance IK08, windage area 0,049 m², dimensions: Ø 175 mm, width 200 mm, weight 3.5 kg

The modular luminaire design makes the replacement of components possible. The product meets the demands of the applicable EU guidelines and product safety regulations and bears the CE and ENEC marks.

IP67 IK08

Specification

Wattage	36 W	Housing colour	silver grey RAL 9006
Delivered lumens	83 lm/W	Power supply cable	Ø 6 – 13 mm
Light source	LED 3000 K	Protection type	IP67
Color Rendering Index	CRI > 80	Protection class	II
Colour tolerance	max 2 SCDM	Impact resistance	IK08
Lifetime ta 25° C	L90/B10 > 50.000 h	Windage area	0,049m²
Control gear	DALI	Dimensions	Ø 175 mm, width 200 mm
Input voltage AC	110 – 240 V	Weight	3,50 kg
Input voltage DC	190 – 250 V	Max. ambient temperature ta	35°
Voltage protection	4 kV L/N | 5 kV L/PE		
Luminaires per B16A / C16A	30 / 51		