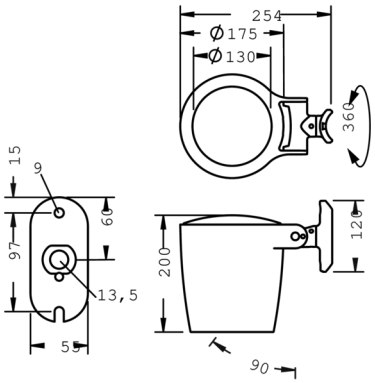


## Monospot 3

8 903 266 249

36 W, 3283 lm, 3000 K warm white, 1-10V, medium wide beam 30°

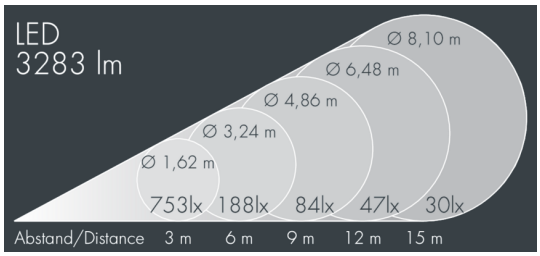


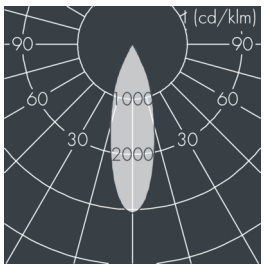


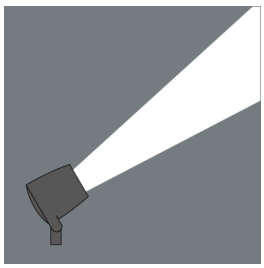

Customized solutions and modifications are possible: Special RAL, DB or NCS colours as polyester powder coat, luminaires in 2700 K and other colour temperatures and versions for high ambient temperature.

### Specification text

housing made of corrosion-resistant die-cast aluminum AlSi12, polyester powder coated by high-quality and UV-stabilized coating process, Colour: white RAL 9002, all exterior parts are stainless steel, tempered safety glass, anti-reflective coating from 1 side, dark screenprint, silicon gasket, closure with 3 stainless steel screws, for installation on poles Ø 60 - 100 mm, tiltable base made of powder coated aluminum, 2 drilled holes Ø 9 mm, spacing 95 mm, 1 centre hole Ø 13.5 mm, tilt range: 90°, 360° adjustable, cable gland: M20, connecting terminal: 5 pole, highly efficient faceted rotationally symmetrical reflector, integral driver (dimmable 1-10V), CRI > 80, max 2 SDCM, service life L90/B10 > 50.000 h, Beam angle (FWHM): 30°, luminous flux: 3283 lm, wattage: 36 W, delivered lumens 91 lm/W, protection type IP67, protection class I, impact resistance IK08, windage area 0,049 m², dimensions: Ø 175 mm, width 200 mm, weight 3.2 kg

The modular luminaire design makes the replacement of components possible. The product meets the demands of the applicable EU guidelines and product safety regulations and bears the CE and ENEC marks.

IP67 IK08

## Specification

| | | | |
|---|---|---|---|
| Wattage | 36 W | Beam angle (FWHM) | 30° |
| Delivered lumens | 91 lm/W | Housing colour | white RAL 9002 |
| Light source | LED 3000 K | Power supply cable | Ø 6 – 13 mm |
| Color Rendering Index | CRI > 80 | Protection type | IP67 |
| Colour tolerance | max 2 SDCM | Protection class | I |
| Lifetime ta 25° C | L90/B10 > 50.000 h | Impact resistance | IK08 |
| Control gear | 1-10V | Windage area | 0,049m² |
| Input voltage AC | 110 – 240 V | Dimensions | Ø 175 mm, width 200 mm |
| Input voltage DC | 190 – 250 V | Weight | 3,20 kg |
| Voltage protection | 4 kV L/N \| 5 kV L/PE | Max. ambient temperature ta | 35° |
| Luminaires per B16A / C16A | 30 / 51 | | |