Data sheet

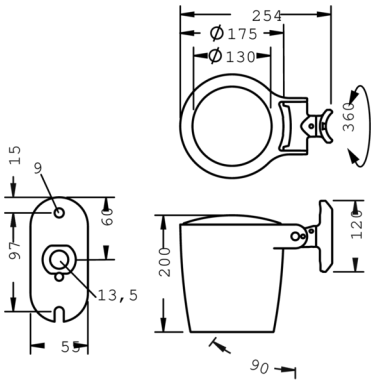

Monospot 3

8 903 266 039

36 W, 2829 lm, 3000 K warm white,
linear, horizontal 9° / 36°

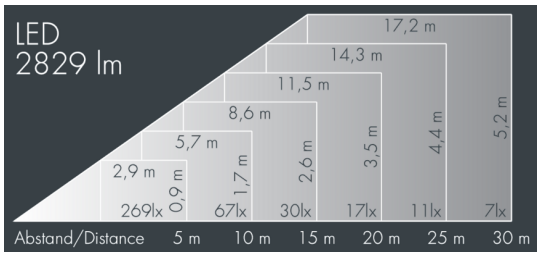

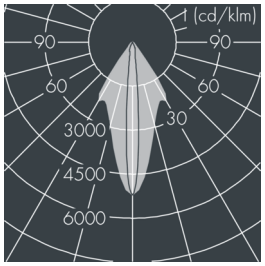

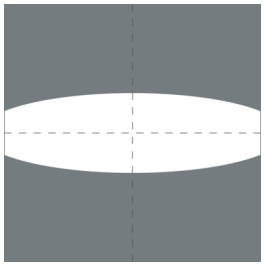

Customized solutions and modifications are possible: Special RAL, DB or NCS colours as polyester powder coat, luminaires in 2700 K and other colour temperatures and versions for high ambient temperature.

Specification text

housing made of corrosion-resistant die-cast aluminum AlSi12, polyester powder coated by high-quality and UV-stabilized coating process, Colour: white RAL 9002, all exterior parts are stainless steel, tempered safety glass, anti-reflective coating from 1 side, dark screenprint, silicon gasket, closure with 3 stainless steel screws, for installation on poles Ø 60 - 100 mm, tiltable base made of powder coated aluminum, 2 drilled holes Ø 9 mm, spacing 95 mm, 1 centre hole Ø 13.5 mm, tilt range: 90°, 360° adjustable, cable gland: M20, connecting terminal: 3 pole, highly efficient faceted rotationally symmetrical reflector, integral driver (AC/DC), CRI > 80, max 2 SDCM, service life L90/B10 > 50.000 h, Beam angle (FWHM): 9° / 36°, luminous flux: 2829 lm, wattage: 36 W, delivered lumens 79 lm/W, protection type IP67, protection class I, impact resistance IK08, windage area 0,049 m², dimensions: Ø 175 mm, width 200 mm, weight 3.2 kg

The modular luminaire design makes the replacement of components possible. The product meets the demands of the applicable EU guidelines and product safety regulations and bears the CE and ENEC marks.

IP 67 IK 08

Specification

Wattage	36 W	Beam angle (FWHM)	9° / 36°
Delivered lumens	79 lm/W	Housing colour	white RAL 9002
Light source	LED 3000 K	Power supply cable	Ø 6 – 13 mm
Color Rendering Index	CRI > 80	Protection type	IP67
Colour tolerance	max 2 SDCM	Protection class	I
Lifetime ta 25° C	L90/B10 > 50.000 h	Impact resistance	IK08
Control gear	on / off	Windage area	0,049m²
Input voltage AC	110 – 240 V	Dimensions	Ø 175 mm, width 200 mm
Input voltage DC	190 – 250 V	Weight	3,20 kg
Voltage protection	4 kV L/N | 5 kV L/PE	Max. ambient temperature ta	35°
Luminaires per B16A / C16A	30 / 51		