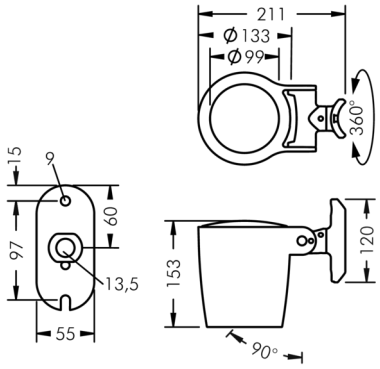

Monospot 2

8 902 255 139

15 W, 1262 lm, 4000 K neutral white, DALI, linear, horizontal 8° / 35°

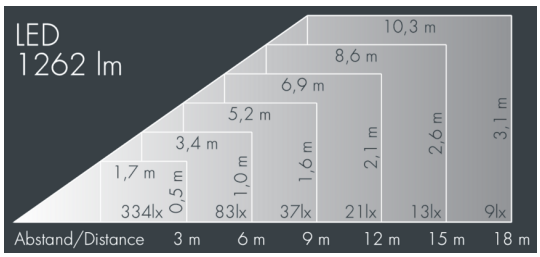

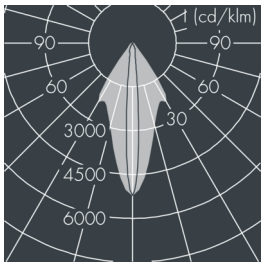

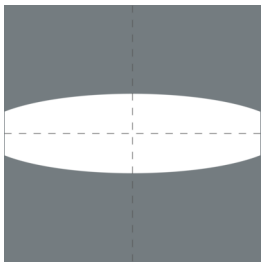

Customized solutions and modifications are possible: Special RAL, DB or NCS colours as polyester powder coat, luminaires in 2700 K and other colour temperatures and versions for high ambient temperature.

Specification text

housing made of corrosion-resistant die-cast aluminum AlSi12, polyester powder coated by high-quality and UV-stabilized coating process, Colour: silver grey , all exterior parts are stainless steel, tempered safety glass, anti-reflective coating from 1 side, dark screenprint, silicon gasket, closure with 2 stainless steel screws, for installation on poles Ø 60 - 100 mm, tiltable base made of powder coated aluminum, 2 drilled holes Ø 9 mm, spacing 95 mm, 1 centre hole Ø 13.5 mm, tilt range: 90°, 360° adjustable, cable gland: M16, connecting terminal: 5 pole, highly efficient faceted rotationally symmetrical reflector, inegral, dimmable driver (DALI), CRI > 80, max 3 SDCM, service life L90/B10 > 50.000 h,
Beam angle (FWHM): 8° / 35°, luminous flux: 1262 lm, wattage: 15 W, delivered lumens 84 lm/W, protection type IP67, protection class I, impact resistance IK08, windage area 0,031 m², dimensions: Ø 133 mm, width 153 mm, weight 2.1 kg

The modular luminaire design makes the replacement of components possible. The product meets the demands of the applicable EU guidelines and product safety regulations and bears the CE and ENEC marks.

IP67 IK08

Specification

Wattage	15 W	Beam angle (FWHM)	8° / 35°
Delivered lumens	84 lm/W	Housing colour	silver grey
Light source	LED 4000 K	Power supply cable	Ø 5 – 9 mm
Color Rendering Index	CRI > 80	Protection type	IP67
Colour tolerance	max 3 SDCM	Protection class	I
Lifetime ta 25° C	L90/B10 > 50.000 h	Impact resistance	IK08
Control gear	DALI	Windage area	0,031m²
Input voltage AC	110 – 240 V	Dimensions	Ø 133 mm, width 153 mm
Input voltage DC	195 – 240 V	Weight	2,10 kg
Voltage protection	2 kV L/N | 2 kV L/PE	Max. ambient temperature ta	45°
Luminaires per B16A / C16A	50 / 85		