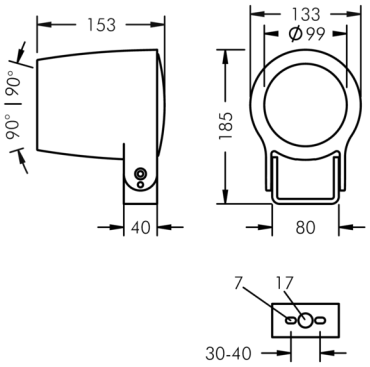

Monospot 2

8 902 056 079

15 W, 1038 lm, 3000 K warm white,
linear, rotatable 35° / 8°

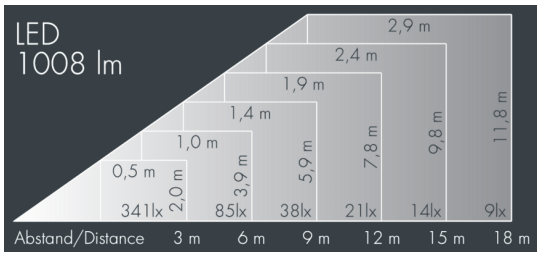

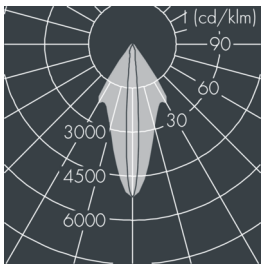

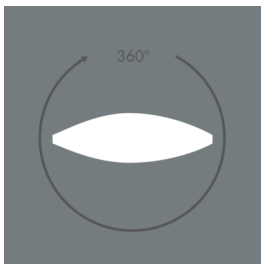

Customized solutions and modifications are possible: Special RAL, DB or NCS colours as polyester powder coat, luminaires in 2700 K and other colour temperatures and versions for high ambient temperature.

Specification text

housing made of corrosion-resistant die-cast aluminum AlSi12, polyester powder coated by high-quality and UV-stabilized coating process, Colour: silver grey , all exterior parts are stainless steel, tempered safety glass, anti-reflective coating from 1 side, continuously adjustable through 360° from outside the luminaire , silicon gasket, closure with 2 stainless steel screws, bracket: 2 long holes Ø 7 mm, spacing 30-40 mm, 1 centre hole Ø 17 mm, tilt range: 180°, cable gland: M16, connecting terminal: 3 pole, highly efficient faceted rotationally symmetrical reflector, integral driver (AC/DC), CRI > 80, max 3 SDCM, service life L90/B10 > 50.000 h, Beam angle (FWHM): 35° / 8°, luminous flux: 1038 lm, wattage: 15 W, delivered lumens 69 lm/W, protection type IP67, protection class I, impact resistance IK08, windage area 0,031 m², dimensions: Ø 133 mm, width 153 mm, weight 2.1 kg

The modular luminaire design makes the replacement of components possible. The product meets the demands of the applicable EU guidelines and product safety regulations and bears the CE and ENEC marks.

IP67 IK08

Specification

Wattage	15 W	Beam angle (FWHM)	35° / 8°
Delivered lumens	69 lm/W	Housing colour	silver grey
Light source	LED 3000 K	Power supply cable	Ø 5 – 9 mm
Color Rendering Index	CRI > 80	Protection type	IP67
Colour tolerance	max 3 SDCM	Protection class	I
Lifetime ta 25° C	L90/B10 > 50.000 h	Impact resistance	IK08
Control gear	on / off	Windage area	0,031m²
Input voltage AC	220 – 240 V	Dimensions	Ø 133 mm, width 153 mm
Input voltage DC	190	Weight	2,10 kg
Voltage protection	1 kV L/N | 1 kV L/PE	Max. ambient temperature ta	45°
Luminaires per B16A / C16A	50 / 85		