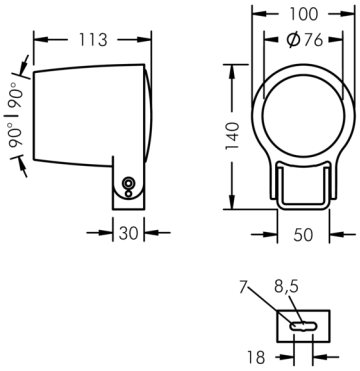

Monospot 1

8 901 056 079

6 W, 416 lm, 3000 K warm white,
linear, rotatable 34° / 7°

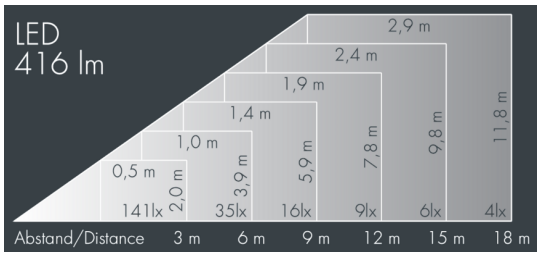

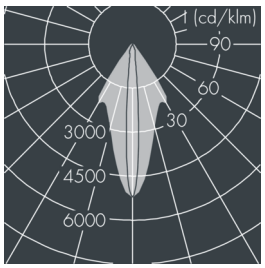

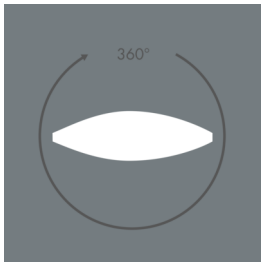

Customized solutions and modifications are possible: Special RAL, DB or NCS colours as polyester powder coat, luminaires in 2700 K and other colour temperatures and versions for high ambient temperature.

Specification text

housing made of corrosion-resistant die-cast aluminum AlSi12, polyester powder coated by high-quality and UV-stabilized coating process, Colour: silver grey , all exterior parts are stainless steel, tempered safety glass, anti-reflective coating from 1 side, continuously adjustable through 360° from outside the luminaire , silicon gasket, closure with 2 stainless steel screws, mounting bracket: 1 elongated hole Ø 7 mm, spacing 18 mm, 1 centre hole Ø 8.5 mm, tilt range: 180°, cable gland: M16, connecting terminal: 3 pole, highly efficient faceted rotationally symmetrical reflector, integral driver (AC), CRI > 80, max 3 SDCM, service life L90/B10 > 50.000 h, Beam angle (FWHM): 34° / 7°, luminous flux: 416 lm, wattage: 6 W, delivered lumens 69 lm/W, protection type IP67, protection class I, impact resistance IK08, windage area 0,017 m², dimensions: Ø 100 mm, width 113 mm, weight 1.1 kg

The modular luminaire design makes the replacement of components possible. The product meets the demands of the applicable EU guidelines and product safety regulations and bears the CE and ENEC marks.

IP67 IK08

Specification

Wattage	6 W	Beam angle (FWHM)	34° / 7°
Delivered lumens	69 lm/W	Housing colour	silver grey
Light source	LED 3000 K	Power supply cable	Ø 5 – 9 mm
Color Rendering Index	CRI > 80	Protection type	IP67
Colour tolerance	max 3 SDCM	Protection class	I
Lifetime ta 25° C	L90/B10 > 50.000 h	Impact resistance	IK08
Control gear	on / off	Windage area	0,017m²
Input voltage AC	100 – 240 V	Dimensions	Ø 100 mm, width 113 mm
Voltage protection	1 kV L/N | 1 kV L/PE	Weight	1,10 kg
Luminaires per B16A / C16A	154 / 154	Max. ambient temperature ta	45°