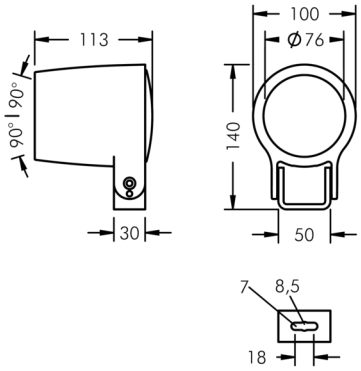

Monospot 1

8 901 045 019

6 W, 453 lm, 4000 K neutral white,
narrow beam 6°

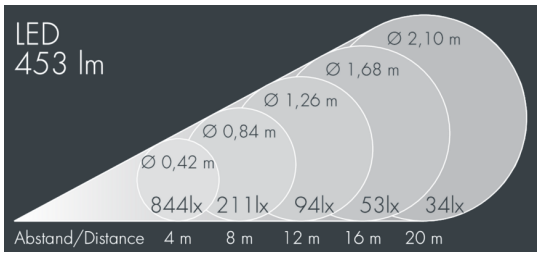

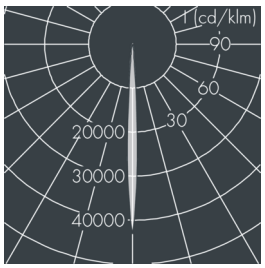

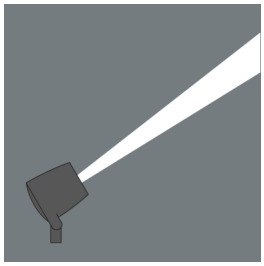

Customized solutions and modifications are possible: Special RAL, DB or NCS colours as polyester powder coat, luminaires in 2700 K and other colour temperatures and versions for high ambient temperature.

Specification text

housing made of corrosion-resistant die-cast aluminum AlSi12, polyester powder coated by high-quality and UV-stabilized coating process, Colour: black RAL 7021, all exterior parts are stainless steel, tempered safety glass, anti-reflective coating from 1 side, dark screenprint, silicon gasket, closure with 2 stainless steel screws, mounting bracket: 1 elongated hole Ø 7 mm, spacing 18 mm, 1 centre hole Ø 8.5 mm, tilt range: 180°, cable gland: M16, connecting terminal: 3 pole, highly efficient faceted rotationally symmetrical reflector, integral driver (AC), CRI > 80, max 3 SDCM, service life L90/B10 > 50.000 h, Beam angle (FWHM): 6°, luminous flux: 453 lm, wattage: 6 W, delivered lumens 76 lm/W, protection type IP67, protection class I, impact resistance IK08, windage area 0,017 m², dimensions: Ø 100 mm, width 113 mm, weight 1 kg

The modular luminaire design makes the replacement of components possible. The product meets the demands of the applicable EU guidelines and product safety regulations and bears the CE and ENEC marks.

IP67 IK08

Specification

Wattage	6 W	Beam angle (FWHM)	6°
Delivered lumens	76 lm/W	Housing colour	black RAL 7021
Light source	LED 4000 K	Power supply cable	Ø 5 – 9 mm
Color Rendering Index	CRI > 80	Protection type	IP67
Colour tolerance	max 3 SDCM	Protection class	I
Lifetime ta 25° C	L90/B10 > 50.000 h	Impact resistance	IK08
Control gear	on / off	Windage area	0,017m²
Input voltage AC	100 – 240 V	Dimensions	Ø 100 mm, width 113 mm
Voltage protection	1 kV L/N | 1 kV L/PE	Weight	1,00 kg
Luminaires per B16A / C16A	154 / 154	Max. ambient temperature ta	45°