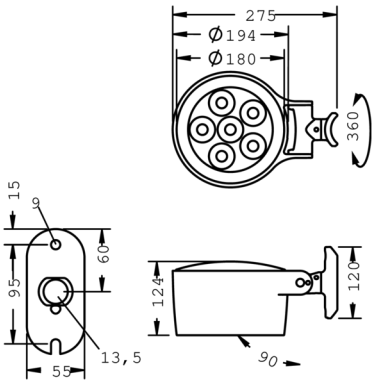

Monospot S4

8 994 245 119

6 × 7,7 W, 2974 lm, 4000 K neutral white, DALI, narrow beam 5°

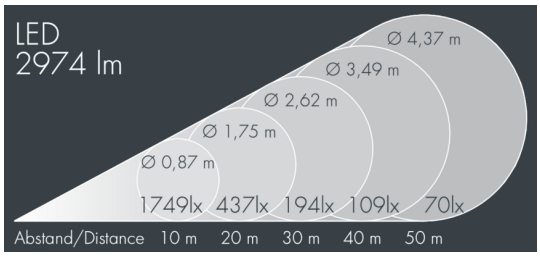

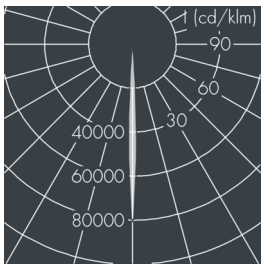

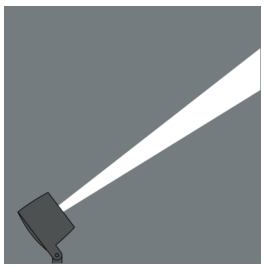

Customized solutions and modifications are possible: Special RAL, DB or NCS colours as polyester powder coat, luminaires in 2700 K and other colour temperatures and versions for high ambient temperature.

Specification text

housing made of corrosion-resistant die-cast aluminum AlSi12, polyester powder coated by high-quality and UV-stabilized coating process, Colour: black RAL 7021, all exterior parts are stainless steel, tempered safety glass, anti-reflective coating from 1 side, dark screenprint, silicon gasket, closure with 3 stainless steel screws, for installation on poles Ø 60 - 100 mm, tiltable base made of powder coated aluminum, 2 drilled holes Ø 9 mm, spacing 95 mm, 1 centre hole Ø 13.5 mm, tilt range: 90°, 360° adjustable, cable gland: M20, connecting terminal: 5 pole, precise PMMA optics, inegral, dimmable driver (DALI), CRI > 80, max 2 SDCM, service life L90/B10 > 50.000 h, Beam angle (FWHM): 5°, luminous flux: 2974 lm, wattage: 46 W, delivered lumens 65 lm/W, protection type IP67, protection class I, impact resistance IK08, windage area 0,027 m², dimensions: Ø 194 mm, width 124 mm, weight 2.8 kg

The modular luminaire design makes the replacement of components possible. The product meets the demands of the applicable EU guidelines and product safety regulations and bears the CE and ENEC marks.

IP67 IK08

Specification

Wattage	46 W	Beam angle (FWHM)	5°
Delivered lumens	65 lm/W	Housing colour	black RAL 7021
Light source	LED 4000 K	Power supply cable	Ø 6 – 13 mm
Color Rendering Index	CRI > 80	Protection type	IP67
Colour tolerance	max 2 SDCM	Protection class	I
Lifetime ta 25° C	L90/B10 > 50.000 h	Impact resistance	IK08
Control gear	DALI	Windage area	0,027m²
Input voltage AC	220 – 240 V	Dimensions	Ø 194 mm, width 124 mm
Input voltage DC	220 – 240 V	Weight	2,80 kg
Voltage protection	6 kV L/N | 10 kV L/PE	Max. ambient temperature ta	40°
Luminaires per B16A / C16A	8 / 9		