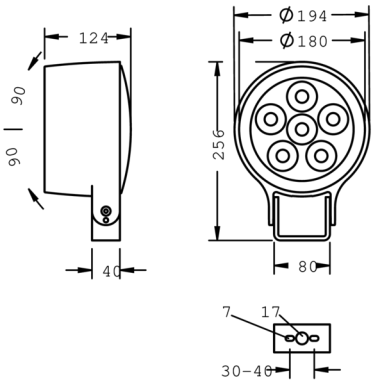

Monospot S4

8 994 056 019

6 × 7,7 W, 2855 lm, 3000 K warm white, narrow beam 5°

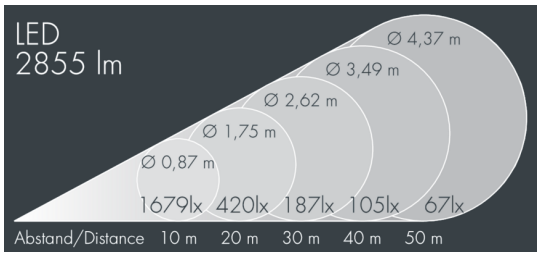

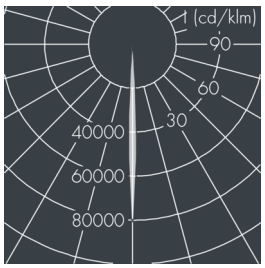

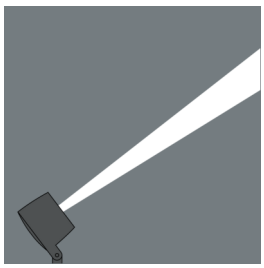

Customized solutions and modifications are possible: Special RAL, DB or NCS colours as polyester powder coat, luminaires in 2700 K and other colour temperatures and versions for high ambient temperature.

Specification text

housing made of corrosion-resistant die-cast aluminum AlSi12, polyester powder coated by high-quality and UV-stabilized coating process, Colour: silver grey , all exterior parts are stainless steel, tempered safety glass, anti-reflective coating from 1 side, dark screenprint, silicon gasket, closure with 3 stainless steel screws, mounting bracket: 2 drilled holes Ø 7 mm, spacing 30-40 mm, 1 centre hole Ø 17 mm, tilt range: 180°, cable gland: M20, connecting terminal: 3 pole, precise PMMA optics, integral driver (AC/DC), CRI > 80, max 2 SDCM, service life L90/B10 > 50.000 h, Beam angle (FWHM): 5°, luminous flux: 2855 lm, wattage: 46 W, delivered lumens 62 lm/W, protection type IP67, protection class I, impact resistance IK08, windage area 0,025 m², dimensions: Ø 194 mm, width 124 mm, weight 2.8 kg

The modular luminaire design makes the replacement of components possible. The product meets the demands of the applicable EU guidelines and product safety regulations and bears the CE and ENEC marks.

IP67 IK08

Specification

Wattage	46 W	Beam angle (FWHM)	5°
Delivered lumens	62 lm/W	Housing colour	silver grey
Light source	LED 3000 K	Power supply cable	Ø 6 – 13 mm
Color Rendering Index	CRI > 80	Protection type	IP67
Colour tolerance	max 2 SDCM	Protection class	I
Lifetime ta 25° C	L90/B10 > 50.000 h	Impact resistance	IK08
Control gear	on / off	Windage area	0,025m²
Input voltage AC	220 – 240 V	Dimensions	Ø 194 mm, width 124 mm
Input voltage DC	220 – 240 V	Weight	2,80 kg
Voltage protection	6 kV L/N | 10 kV L/PE	Max. ambient temperature ta	40°
Luminaires per B16A / C16A	8 / 9		