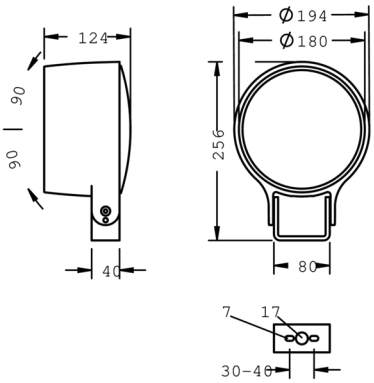

Monospot S4

8 994 045 059

45 W, 3958 lm, 4000 K neutral white,
wide beam (with indirect reflector)

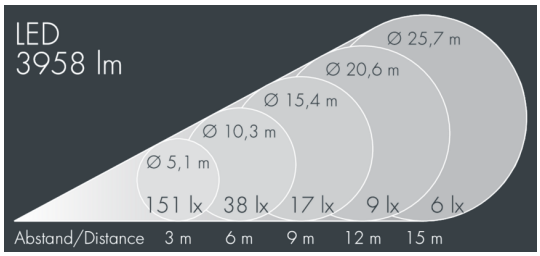

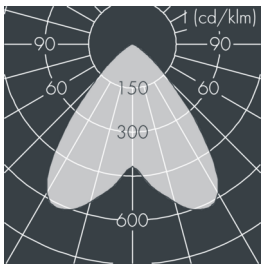

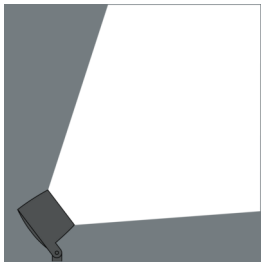

Customized solutions and modifications are possible: Special RAL, DB or NCS colours as polyester powder coat, luminaires in 2700 K and other colour temperatures and versions for high ambient temperature.

Specification text

housing made of corrosion-resistant die-cast aluminum AlSi12, polyester powder coated by high-quality and UV-stabilized coating process, Colour: black RAL 7021, all exterior parts are stainless steel, tempered safety glass, anti-reflective coating from 1 side, dark screenprint, silicon gasket, closure with 3 stainless steel screws, mounting bracket: 2 drilled holes Ø 7 mm, spacing 30-40 mm, 1 centre hole Ø 17 mm, tilt range: 180°, cable gland: M20, connecting terminal: 3 pole, highly efficient faceted rotationally symmetrical reflector, integral driver (AC/DC), CRI > 80, luminous flux: 3958 lm, wattage: 45 W, delivered lumens 87 lm/W, protection type IP67, protection class I, impact resistance IK08, dimensions:
Ø 194 mm, width 124 mm, weight 3 kg

The modular luminaire design makes the replacement of components possible. The product meets the demands of the applicable EU guidelines and product safety regulations and bears the CE and ENEC marks.

IP67 IK08

Specification

Wattage	45 W	Housing colour	black RAL 7021
Delivered lumens	87 lm/W	Protection type	IP67
Light source	LED 4000 K	Protection class	I
Color Rendering Index	CRI > 80	Impact resistance	IK08
Control gear	on / off	Dimensions	Ø 194 mm, width 124 mm
		Weight	3,00 kg