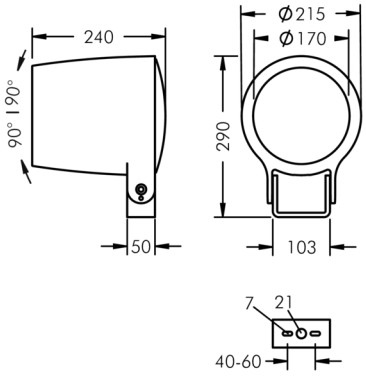

Monospot 4

8 904 066 139

70 W, 4909 lm, 3000 K warm white, DALI, linear, horizontal 9° / 36°

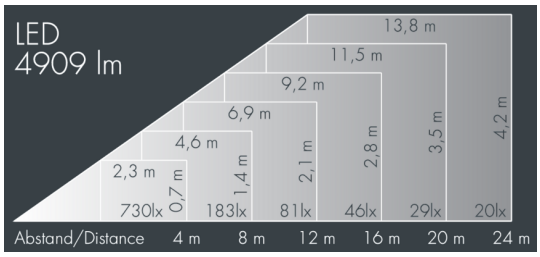

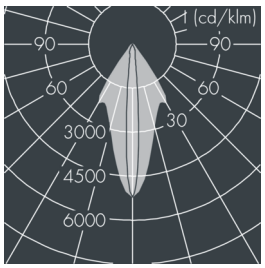

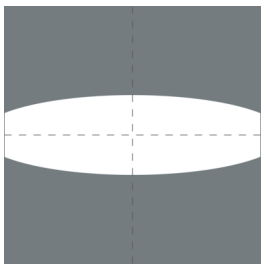

Customized solutions and modifications are possible: Special RAL, DB or NCS colours as polyester powder coat, luminaires in 2700 K and other colour temperatures and versions for high ambient temperature.

Specification text

housing made of corrosion-resistant die-cast aluminum AlSi12, polyester powder coated by high-quality and UV-stabilized coating process, Colour: white RAL 9002, all exterior parts are stainless steel, tempered safety glass, anti-reflective coating from 1 side, dark screenprint, silicon gasket, closure with 3 stainless steel screws, bracket: 2 long holes Ø 7 mm, spacing 40-60 mm, 1 centre hole Ø 21 mm, tilt range: 180°, cable gland: M20, connecting terminal: 5 pole, highly efficient faceted rotationally symmetrical reflector, inegral, dimmable driver (DALI), CRI > 80, max 2 SDCM, service life L90/B10 > 50.000 h,
Beam angle (FWHM): 9° / 36°, luminous flux: 4909 lm, wattage: 70 W, delivered lumens 71 lm/W, protection type IP67, protection class I, impact resistance IK08, windage area 0,075 m², dimensions: Ø 215 mm, width 240 mm, weight 4.8 kg

The modular luminaire design makes the replacement of components possible. The product meets the demands of the applicable EU guidelines and product safety regulations and bears the CE and ENEC marks.

IP67 IK08

Specification

Wattage	70 W	Beam angle (FWHM)	9° / 36°
Delivered lumens	71 lm/W	Housing colour	white RAL 9002
Light source	LED 3000 K	Power supply cable	Ø 6 – 13 mm
Color Rendering Index	CRI > 80	Protection type	IP67
Colour tolerance	max 2 SDCM	Protection class	I
Lifetime ta 25° C	L90/B10 > 50.000 h	Impact resistance	IK08
Control gear	DALI	Windage area	0,075m²
Input voltage AC	220 – 240 V	Dimensions	Ø 215 mm, width 240 mm
Input voltage DC	195 – 255 V	Weight	4,80 kg
Voltage protection	2 kV L/N | 4 kV L/PE	Max. ambient temperature ta	35°
Luminaires per B16A / C16A	10 / 16		