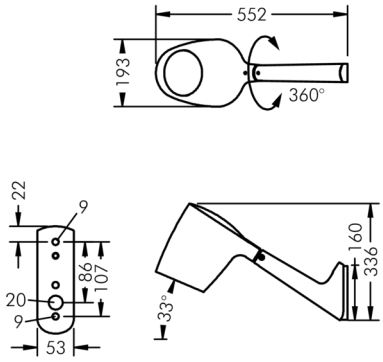

Monospot+

8 996 556 039

52 W, 4230 lm, 3000 K warm white,
linear, horizontal 12° / 37°

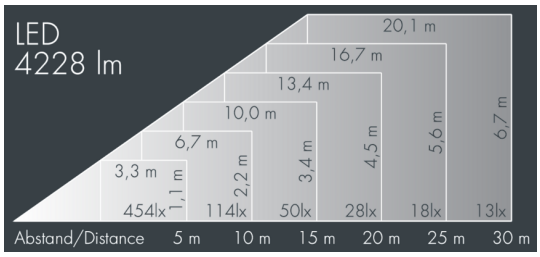

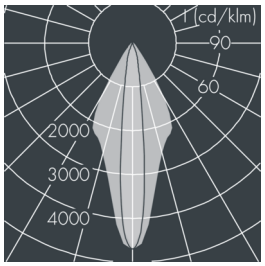

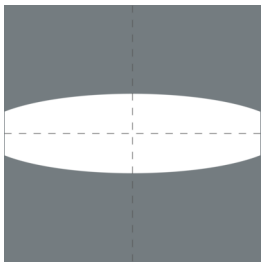

Customized solutions and modifications are possible: Special RAL, DB or NCS colours as polyester powder coat, luminaires in 2700 K and other colour temperatures and versions for high ambient temperature.

Specification text

housing made of corrosion-resistant die-cast aluminum AlSi12, polyester powder coated by high-quality and UV-stabilized coating process, Colour: silver grey , all exterior parts are stainless steel, tempered safety glass, anti-reflective coating from 1 side, dark screenprint, silicon gasket, closure with 3 stainless steel screws, for installation on poles Ø 60 - 100 mm, tiltable base made of powder coated aluminum, 2 drilled holes Ø 9 mm, spacing 95 mm, 1 centre hole Ø 40 mm, tilt range: tilt range 33°, swivel range 360°, cable gland: M20, connecting terminal: 3 pole, highly efficient aluminum reflector, integral driver (AC/DC), CRI > 80, max 2 SDCM, service life L80/B10 > 50.000 h,
Beam angle (FWHM): 12° / 37°, luminous flux: 4230 lm, wattage: 52 W, delivered lumens 81 lm/W, protection type IP65, protection class I, impact resistance IK08, windage area 0,059 m², dimensions: Ø 193 mm, width 231 mm, weight 3.8 kg

The modular luminaire design makes the replacement of components possible. The product meets the demands of the applicable EU guidelines and product safety regulations and bears the CE mark.

IP65 IK08

Specification

Wattage	52 W	Beam angle (FWHM)	12° / 37°
Delivered lumens	81 lm/W	Housing colour	silver grey
Light source	LED 3000 K	Power supply cable	Ø 6 – 13 mm
Color Rendering Index	CRI > 80	Protection type	IP65
Colour tolerance	max 2 SDCM	Protection class	I
Lifetime ta 25° C	L80/B10 > 50.000 h	Impact resistance	IK08
Control gear	on / off	Windage area	0,059m²
Input voltage AC	220 – 240 V	Dimensions	Ø 193 mm, width 231 mm
Input voltage DC	220 – 240 V	Weight	3,80 kg
Voltage protection	2 kV L/N | 2 kV L/PE	Max. ambient temperature ta	35°
Luminaires per B16A / C16A	23 / 39		