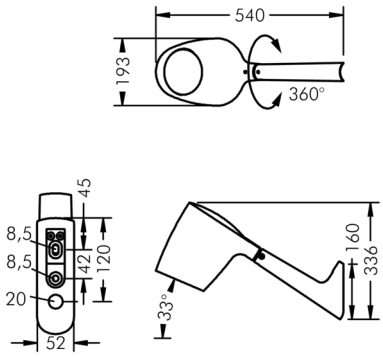

Monospot+

8 996 348 099

0 W, 2200 K warm white,
asymmetrical beam 38°

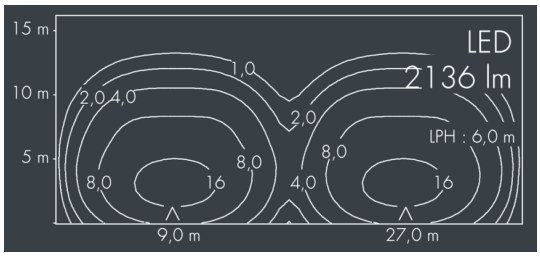

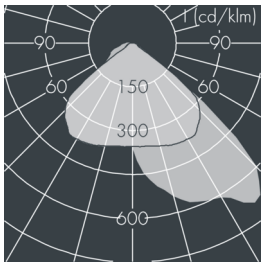

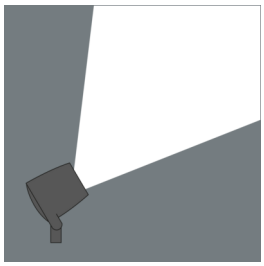

Customized solutions and modifications are possible: Special RAL, DB or NCS colours as polyester powder coat, luminaires in 2700 K and other colour temperatures and versions for high ambient temperature.

Specification text

housing made of corrosion-resistant die-cast aluminum AlSi12, polyester powder coated by high-quality and UV-stabilized coating process, Colour: black RAL 7021, all exterior parts are stainless steel, tempered safety glass, anti-reflective coating from 1 side, dark screenprint, silicon gasket, closure with 3 stainless steel screws, for installation on poles Ø 60 - 100 mm, tiltable base made of powder coated aluminium, 2 drilled holes Ø 8.5 mm, spacing 42 mm, 1 centre hole Ø 20 mm, tilt range: tilt range 33°, swivel range 360°, cable gland: M20, connecting terminal: 3 pole, highly efficient aluminum reflector, integral driver (AC/DC), max 2 SDCM,
service life L80/B10 > 50.000 h, wattage: 0 W, protection type IP65, protection class I, impact resistance IK08, windage area 0,059 m², dimensions (L×H×W): 240 × 307 × 215 mm, weight 3.8 kg

The modular luminaire design makes the replacement of components possible. The product meets the demands of the applicable EU guidelines and product safety regulations and bears the CE mark.

IP65 IK08

Specification

Wattage	0 W	Housing colour	black RAL 7021
Light source	LED 2200 K	Power supply cable	Ø 6 – 13 mm
Colour tolerance	max 2 SDCM	Protection type	IP65
Lifetime ta 25° C	L80/B10 > 50.000 h	Protection class	I
Control gear	on / off	Impact resistance	IK08
Input voltage AC	220 – 240 V	Windage area	0,059m²
Input voltage DC	220 – 240 V	Dimensions	240 × 307 × 215 mm
Voltage protection	2 kV L/N | 2 kV L/PE	Weight	3,80 kg
Luminaires per B16A / C16A	23 / 39	Max. ambient temperature ta	35°