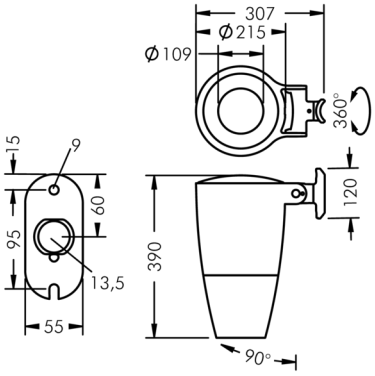

Monospot Gobo

8 905 246 159

55 W, 1066 lm, 3000 K warm white, DALI,
63 mm focal length 29°

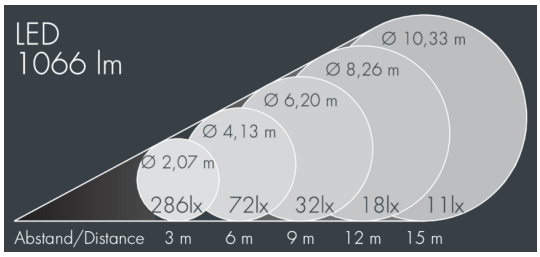

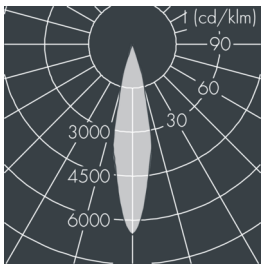

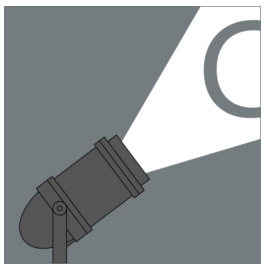

Specification text

housing made of corrosion-resistant die-cast aluminum AlSi12, polyester powder coated by high-quality and UV-stabilized coating process, Colour: black RAL 7021, all exterior parts are stainless steel, tempered safety glass, anti-reflective coating from 1 side, dark screenprint, silicon gasket, closure with 3 stainless steel screws, for installation on poles Ø 60 - 100 mm, tiltable base made of powder coated aluminum, 2 drilled holes Ø 9 mm, spacing 95 mm, 1 centre hole Ø 13.5 mm, tilt range: 90°, 360° adjustable, cable gland: M20, connecting terminal: 5 pole, focusable projection lens for precise light control and sharp-edged image projections, integral driver (DALI), CRI > 80, Beam angle (FWHM): 29°, luminous flux: 1066 lm, wattage: 55 W, delivered lumens 19 lm/W, protection type IP65, protection class I, impact resistance IK08, windage area 0,076 m², dimensions: Ø 215 mm, width 390 mm, weight 8 kg

The modular luminaire design makes the replacement of components possible. The product meets the demands of the applicable EU guidelines and product safety regulations and bears the CE mark.

IP65 IK08

Specification

Wattage	55 W	Beam angle (FWHM)	29°
Delivered lumens	19 lm/W	Housing colour	black RAL 7021
Light source	LED 3000 K	Power supply cable	Ø 6 – 13 mm
Color Rendering Index	CRI > 80	Protection type	IP65
Control gear	DALI	Protection class	I
Input voltage AC	220 – 240 V	Impact resistance	IK08
Input voltage DC	220 – 240 V	Windage area	0,076m²
Voltage protection	2 kV L/N | 4 kV L/PE	Dimensions	Ø 215 mm, width 390 mm
Luminaires per B16A / C16A	23 / 39	Weight	8,00 kg
		Max. ambient temperature ta	35°