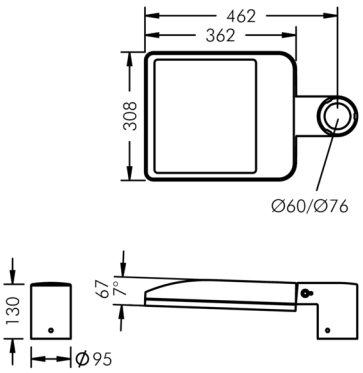

Monospace

8 250 366 189

54 W, 6643 lm, 3000 K warm white, DALI, asymmetrical wide beam 60° / 138°

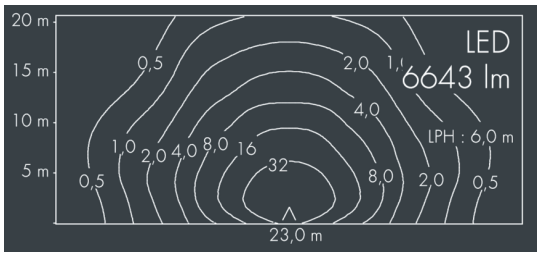

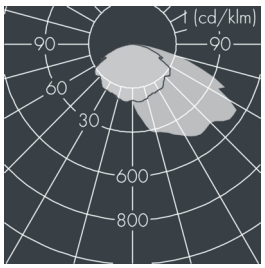

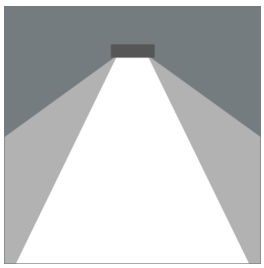

Customized solutions and modifications are possible: Special RAL, DB or NCS colours as polyester powder coat, luminaires in 2700 K and other colour temperatures and versions for high ambient temperature.

Specification text

housing made of corrosion-resistant die-cast aluminum AlSi12, polyester powder coated by high-quality and UV-stabilized coating process, Colour: white RAL 9002, all exterior parts are stainless steel, tempered high effiency safety glass, anti-reflective coating from 1 side, dark screenprint, silicon gasket, closure with 4 stainless steel screws, with pole top fitter for 1 luminaire for poles Ø 60/76 mm, 3 M8 grub screws, tilt range: 7°, cable gland: M20, with 8 m cable H05RN-F5G1, connecting terminal: 5 pole, highly efficient metallized PC reflector, integral driver (DALI), CRI > 80, 3 SCDM, service life L80/B20 > 50.000 h,
Beam angle (FWHM): 60° / 138°, luminous flux: 6643 lm, wattage: 54 W, delivered lumens 123 lm/W, protection type IP67, protection class I, impact resistance IK08, windage area 0,063 m², dimensions (L×H×W): 362 × 67 × 308 mm, weight 5.1 kg

The modular luminaire design makes the replacement of components possible. The product meets the demands of the applicable EU guidelines and product safety regulations and bears the CE and ENEC marks.

IP67 IK08

Specification

Wattage	54 W	Beam angle (FWHM)	60° / 138°
Delivered lumens	123 lm/W	Housing colour	white RAL 9002
Light source	LED 3000 K	Power supply cable	Ø 5 – 14 mm
Color Rendering Index	CRI > 80	Protection type	IP67
Colour tolerance	3 SCDM	Protection class	I
Lifetime ta 25° C	L80/B20 > 50.000 h	Impact resistance	IK08
Control gear	DALI	Windage area	0,063m²
		Dimensions	362 × 67 × 308 mm
		Weight	5,10 kg
		Max. ambient temperature ta	35°