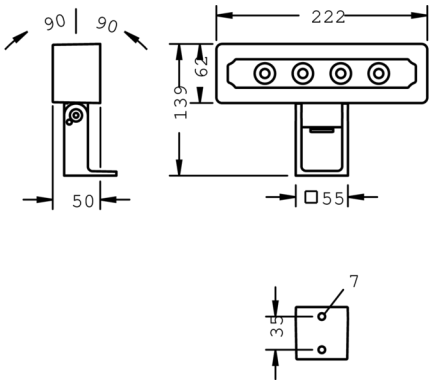


## Monoline 1

8 780 156 119

4 × 2,5 W, 907 lm, 3000 K warm white, DALI, narrow beam 12°

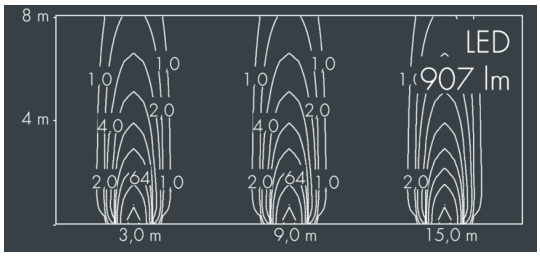


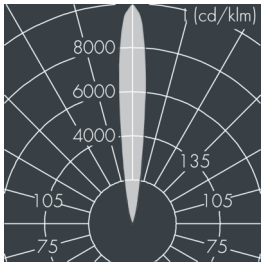

Customized solutions and modifications are possible: Special RAL, DB or NCS colours as polyester powder coat, luminaires in 2700 K and other colour temperatures and versions for high ambient temperature.

### Specification text

housing made of corrosion-resistant die-cast aluminum AlSi12, polyester powder coated by high-quality and UV-stabilized coating process, Colour: silver grey , all exterior parts are stainless steel, tempered safety glass, anti-reflective coating from 1 side, with partial frosting for uniform light diffraction and dark silk-print, silicon gasket, closure with 4 stainless steel screws, wall bracket: 2 drilled holes Ø 7 mm, spacing 35 mm, tilt range: 180°, cable gland: M20, connecting terminal: 5 pole, highly efficient optics made of transparent thermoplastic for precise lighting tasks , integral driver (DALI), CRI > 80, max 3 SDCM, service life L80/B20 > 50.000 h, Beam angle (FWHM): 12°, luminous flux: 907 lm, wattage: 10 W, delivered lumens 91 lm/W, protection type IP65, protection class I, impact resistance IK08, windage area 0,016 m², dimensions (L×H×W): 222 × 50 × 62 mm, weight 1.2 kg

The modular luminaire design makes the replacement of components possible. The product meets the demands of the applicable EU guidelines and product safety regulations and bears the CE mark.

IP65 IK08

## Specification

| | | | |
|---|---|---|---|
| Wattage | 10 W | Beam angle (FWHM) | 12° |
| Delivered lumens | 91 lm/W | Housing colour | silver grey |
| Light source | LED 3000 K | Power supply cable | Ø 6 – 13 mm |
| Color Rendering Index | CRI > 80 | Protection type | IP65 |
| Colour tolerance | max 3 SDCM | Protection class | I |
| Lifetime ta 25° C | L80/B20 > 50.000 h | Impact resistance | IK08 |
| Control gear | DALI | Windage area | 0,016m² |
| Input voltage AC | 220 – 240 V | Dimensions | 222 × 50 × 62 mm |
| Input voltage DC | 220 – 240 V | Weight | 1,20 kg |
| Voltage protection | 2 kV L/N \| 4 kV L/PE | Max. ambient temperature ta | 40° |
| Luminaires per B16A / C16A | 50 / 50 | | |