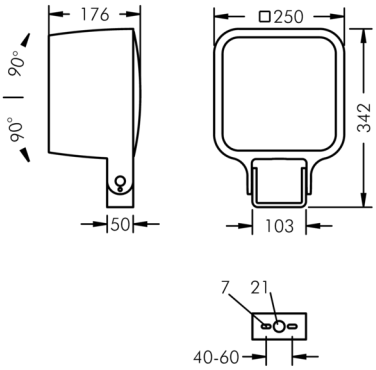

Monoflood 4

8 204 055 119

13 × 7,5 W, 6358 lm, 4000 K neutral white, DALI, narrow beam 5°

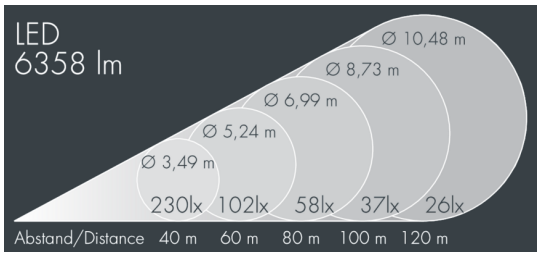

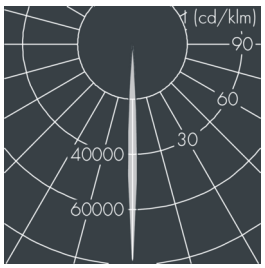

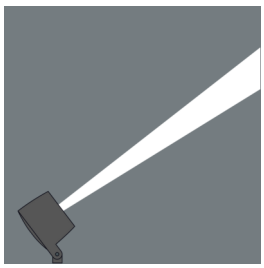

Customized solutions and modifications are possible: Special RAL, DB or NCS colours as polyester powder coat, luminaires in 2700 K and other colour temperatures and versions for high ambient temperature.

Specification text

housing made of corrosion-resistant die-cast aluminum AlSi12, polyester powder coated by high-quality and UV-stabilized coating process, Colour: silver grey , all exterior parts are stainless steel, tempered safety glass, anti-reflective coating from 1 side, dark screenprint, silicon gasket, closure with 4 stainless steel screws, mounting bracket: 2 drilled holes Ø 7 mm, spacing 40 - 60 mm, 1 centre hole Ø 21 mm, tilt range: 180°, cable gland: M20, connecting terminal: 5 pole, precise PMMA optics, integral driver (DALI), CRI > 80, max 3 SDCM, service life L90/B10 > 50.000 h, Beam angle (FWHM): 5°, luminous flux: 6358 lm, wattage: 98 W, delivered lumens 65 lm/W, protection type IP67, protection class I, impact resistance IK10, windage area 0,046 m², dimensions (L×H×W): 250 × 170 × 250 mm, weight 6.6 kg

The modular luminaire design makes the replacement of components possible. The product meets the demands of the applicable EU guidelines and product safety regulations and bears the CE and ENEC marks.

IP67 IK10

Specification

Wattage	98 W	Beam angle (FWHM)	5°
Delivered lumens	65 lm/W	Housing colour	silver grey
Light source	LED 4000 K	Power supply cable	Ø 6 – 13 mm
Color Rendering Index	CRI > 80	Protection type	IP67
Colour tolerance	max 3 SDCM	Protection class	I
Lifetime ta 25° C	L90/B10 > 50.000 h	Impact resistance	IK10
Control gear	DALI	Windage area	0,046m²
Input voltage AC	100 – 280 V	Dimensions	250 × 170 × 250 mm
Input voltage DC	140 – 380 V	Weight	6,60 kg
Voltage protection	4 kV L/N | 10 kV L/PE	Max. ambient temperature ta	35°