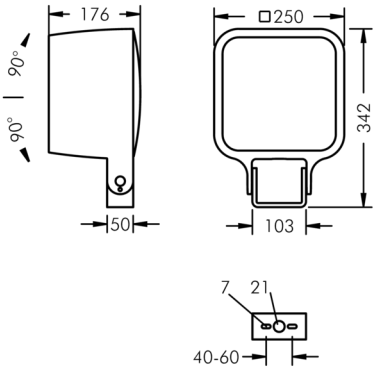

Monoflood 4

8 204 046 069

4 × 25,5 W, 10952 lm, 3000 K warm white, axially symmetrical, narrow beam 43° / 62°

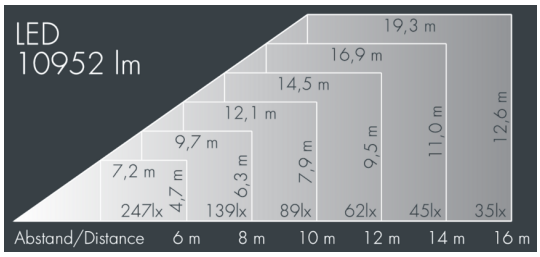

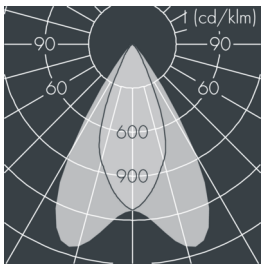

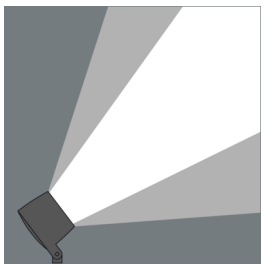

Customized solutions and modifications are possible: Special RAL, DB or NCS colours as polyester powder coat, luminaires in 2700 K and other colour temperatures and versions for high ambient temperature.

Specification text

housing made of corrosion-resistant die-cast aluminum AlSi12, polyester powder coated by high-quality and UV-stabilized coating process, Colour: black RAL 7021, all exterior parts are stainless steel, tempered safety glass, anti-reflective coating from 1 side, dark screenprint, silicon gasket, closure with 4 stainless steel screws, mounting bracket: 2 drilled holes Ø 7 mm, spacing 40 - 60 mm, 1 centre hole Ø 21 mm, tilt range: 180°, cable gland: M20, connecting terminal: 3 pole, highly efficient aluminum reflector, integral driver (AC/DC), CRI > 80, max 2 SDCM, service life L90/B10 > 50.000 h, Beam angle (FWHM): 43° / 62°, luminous flux: 10952 lm, wattage: 102 W, delivered lumens 108 lm/W, protection type IP67, protection class I, impact resistance IK10, windage area 0,046 m², dimensions (L×H×W): 250 × 176 × 250 mm, weight 6.2 kg

The modular luminaire design makes the replacement of components possible. The product meets the demands of the applicable EU guidelines and product safety regulations and bears the CE and ENEC marks.

IP67 IK10

Specification

Wattage	102 W	Beam angle (FWHM)	43° / 62°
Delivered lumens	108 lm/W	Housing colour	black RAL 7021
Light source	LED 3000 K	Protection type	IP67
Color Rendering Index	CRI > 80	Protection class	I
Colour tolerance	max 2 SDCM	Impact resistance	IK10
Lifetime ta 25° C	L90/B10 > 50.000 h	Windage area	0,046m²
Control gear	on / off	Dimensions	250 × 176 × 250 mm
Input voltage AC	100 – 280 V	Weight	6,20 kg
Input voltage DC	140 – 380 V	Max. ambient temperature ta	35°
Voltage protection	4 kV L/N | 10 kV L/PE		