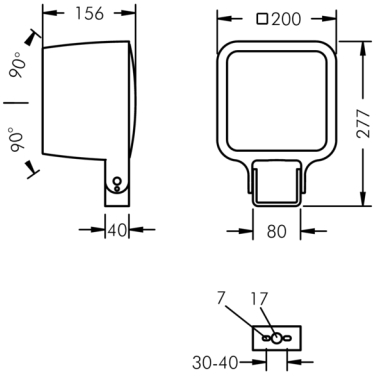

Monoflood 3

8 203 069 049

52 W, 1650 lm, RGBW (3000 K) warm white, DMX, medium wide beam 35°

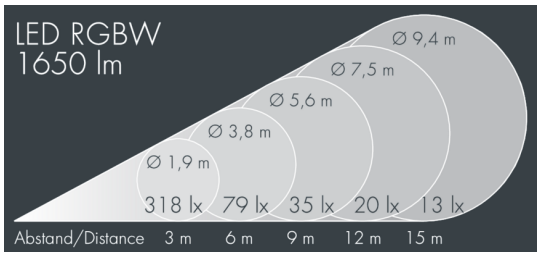

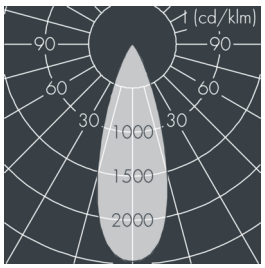

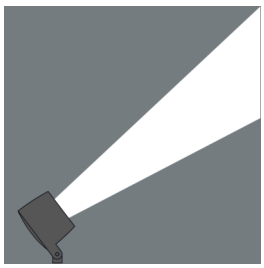

Customized solutions and modifications are possible: Special RAL, DB or NCS colours as polyester powder coat, luminaires in 2700 K and other colour temperatures and versions for high ambient temperature.

Specification text

housing made of corrosion-resistant die-cast aluminum AlSi12, polyester powder coated by high-quality and UV-stabilized coating process, Colour: white RAL 9002, all exterior parts are stainless steel, tempered safety glass, anti-reflective coating from 1 side, dark screenprint, silicon gasket, closure with 4 stainless steel screws, mounting bracket: 2 drilled holes Ø 7 mm, spacing 30 - 40 mm, 1 centre hole Ø 17 mm, tilt range: 180°, cable gland: M20, connecting terminal: 6 pole, precise PMMA optics, integral driver (AC/DC),
service life L80/B20 > 50.000 h, Beam angle (FWHM): 35°, luminous flux: 1650 lm, wattage: 52 W, delivered lumens 32 lm/W, protection type IP67, protection class I, impact resistance IK10, windage area 0,032 m², dimensions (L×H×W): 200 × 156 × 200 mm, weight 4.6 kg

The modular luminaire design makes the replacement of components possible. The product meets the demands of the applicable EU guidelines and product safety regulations and bears the CE and ENEC marks.

IP67 IK10

Specification

Wattage	52 W	Beam angle (FWHM)	35°
Delivered lumens	32 lm/W	Housing colour	white RAL 9002
Light source	LED RGBW (3000 K)	Protection type	IP67
Lifetime ta 25° C	L80/B20 > 50.000 h	Protection class	I
Control gear	DMX	Impact resistance	IK10
Input voltage AC	134 – 230 V	Windage area	0,032m²
Input voltage DC	134 – 230 V	Dimensions	200 × 156 × 200 mm
Voltage protection	1 kV L/N | 2 kV L/PE	Weight	4,60 kg
Luminaires per B16A / C16A	22 / 22	Max. ambient temperature ta	35°