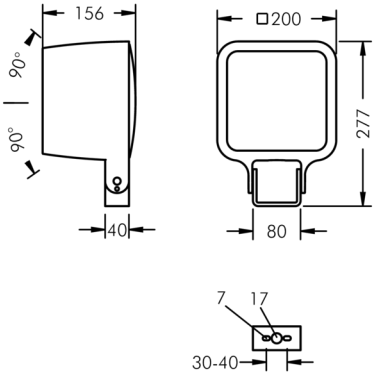

Monoflood 3

8 203 056 199

53 W, 4792 lm, 3000 K warm white, DALI, asymmetrical beam 56°

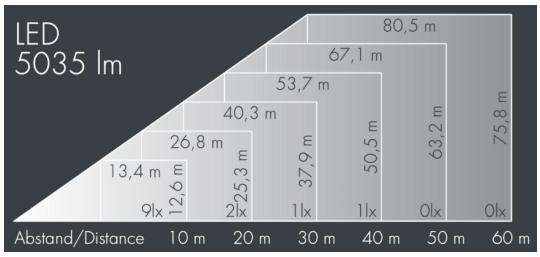

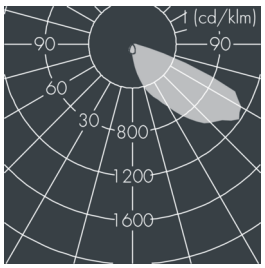

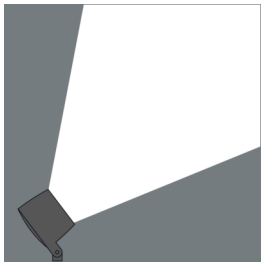

Customized solutions and modifications are possible: Special RAL, DB or NCS colours as polyester powder coat, luminaires in 2700 K and other colour temperatures and versions for high ambient temperature.

Specification text

housing made of corrosion-resistant die-cast aluminum AlSi12, polyester powder coated by high-quality and UV-stabilized coating process, Colour: silver grey , all exterior parts are stainless steel, tempered safety glass, anti-reflective coating from 1 side, dark screenprint, silicon gasket, closure with 4 stainless steel screws, mounting bracket: 2 drilled holes Ø 7 mm, spacing 30 - 40 mm, 1 centre hole Ø 17 mm, tilt range: 180°, cable gland: M20, connecting terminal: 5 pole, highly efficient aluminum reflector, integral driver (DALI), CRI > 80, 2 SCDM, service life L90/B10 > 50.000 h, luminous flux: 4792 lm, wattage: 53 W, delivered lumens 90 lm/W, protection type IP67, protection class I, impact resistance IK10, windage area 0,032 m², dimensions (L×H×W): 200 × 156 × 200 mm, weight 3.9 kg

The modular luminaire design makes the replacement of components possible. The product meets the demands of the applicable EU guidelines and product safety regulations and bears the CE and ENEC marks.

IP67 IK10

Specification

Wattage	53 W	Housing colour	silver grey
Delivered lumens	90 lm/W	Power supply cable	Ø 6 – 13 mm
Light source	LED 3000 K	Protection type	IP67
Color Rendering Index	CRI > 80	Protection class	I
Colour tolerance	2 SCDM	Impact resistance	IK10
Lifetime ta 25° C	L90/B10 > 50.000 h	Windage area	0,032m²
Control gear	DALI	Dimensions	200 × 156 × 200 mm
Input voltage AC	220 – 240 V	Weight	3,90 kg
Input voltage DC	220 – 240 V	Max. ambient temperature ta	30°
Voltage protection	3 kV L/N | 4 kV L/PE		
Luminaires per B16A / C16A	30 / 51		