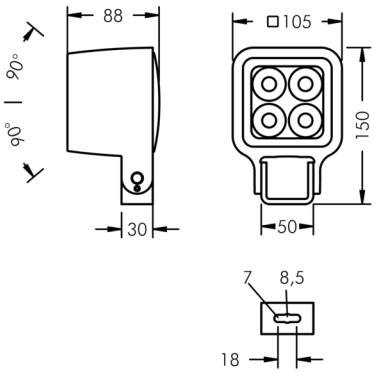


## Monoflood 1

8 201 045 089

9 W, 713 lm, 4000 K neutral white,
asymmetrical wide beam 53° / 115°

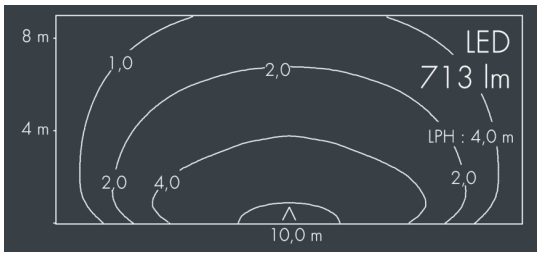


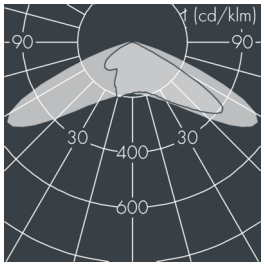


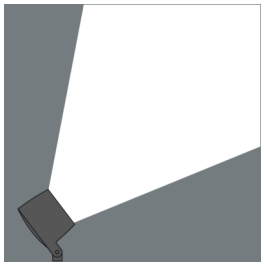

Customized solutions and modifications are possible: Special RAL, DB or NCS colours as polyester powder coat, luminaires in 2700 K and other colour temperatures and versions for high ambient temperature.

### Specification text

housing made of corrosion-resistant die-cast aluminum AlSi12, polyester powder coated by high-quality and UV-stabilized coating process, Colour: black RAL 7021, all exterior parts are stainless steel, tempered safety glass, anti-reflective coating from 1 side, dark screenprint, silicon gasket, closure with 4 stainless steel screws, mounting bracket: 1 elongated hole Ø 7 mm, spacing 18 mm, 1 centre hole Ø 8.5 mm, tilt range: 180°, cable gland: M16, connecting terminal: 3 pole, precise PMMA optics, integral driver (AC/DC), CRI > 70, 3,
service life L80/B20 > 50.000 h,
Beam angle (FWHM): 53° / 115°, luminous flux: 713 lm, wattage: 9 W, delivered lumens 78 lm/W, protection type IP67, protection class I, impact resistance IK08, windage area 0,012 m², dimensions (L×H×W): 105 × 88 × 105 mm, weight 1.2 kg

The modular luminaire design makes the replacement of components possible. The product meets the demands of the applicable EU guidelines and product safety regulations and bears the CE mark.

IP67 IK08

## Specification

| | | | |
|---|---|---|---|
| Wattage | 9 W | Beam angle (FWHM) | 53° / 115° |
| Delivered lumens | 78 lm/W | Housing colour | black RAL 7021 |
| Light source | LED 4000 K | Protection type | IP67 |
| Color Rendering Index | CRI > 70 | Protection class | I |
| Colour tolerance | 3 | Impact resistance | IK08 |
| Lifetime ta 25° C | L80/B20 > 50.000 h | Windage area | 0,012m² |
| Control gear | on / off | Dimensions | 105 × 88 × 105 mm |
| Input voltage AC | 220 – 240 V | Weight | 1,20 kg |
| Input voltage DC | 220 – 240 V | Max. ambient temperature ta | 45° |
| Voltage protection | 2 kV L/N \| 4 kV L/PE | | |
| Luminaires per B16A / C16A | 50 / 50 | | |