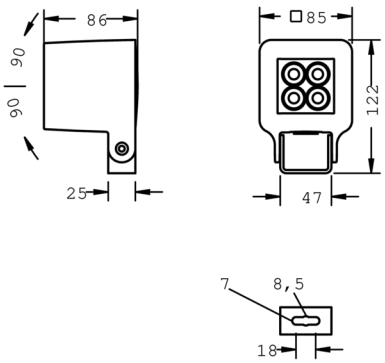

Monocube 2

8 262 055 019

4 × 1,7 W, 629 lm, 4000 K neutral white, narrow beam 6°

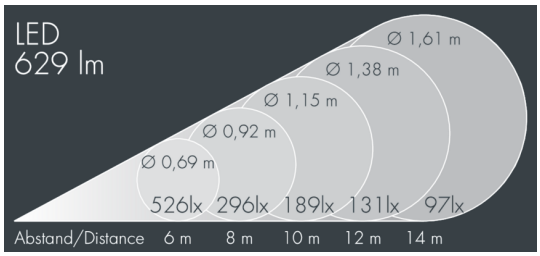

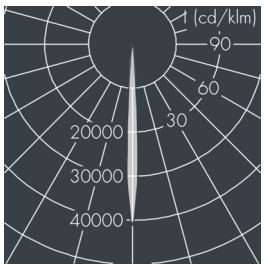

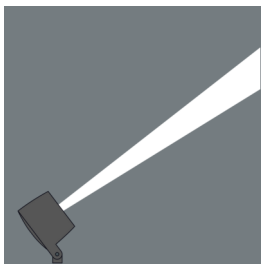

Customized solutions and modifications are possible: Special RAL, DB or NCS colours as polyester powder coat, luminaires in 2700 K and other colour temperatures and versions for high ambient temperature.

Specification text

housing made of corrosion-resistant die-cast aluminum AlSi12, polyester powder coated by high-quality and UV-stabilized coating process, Colour: silver grey , all exterior parts are stainless steel, tempered safety glass, anti-reflective coating from 1 side, dark screenprint, silicon gasket, closure with 4 stainless steel screws, mounting bracket: 1 elongated hole Ø 7 mm, spacing 18 mm, 1 centre hole Ø 8.5 mm, tilt range: 180°, cable gland: M20, connecting terminal: 3 pole, precise PMMA optics, integral driver (AC/DC), CRI > 80, max 2 SDCM, service life L90/B10 > 50.000 h, Beam angle (FWHM): 6°, luminous flux: 629 lm, wattage: 7 W, delivered lumens 86 lm/W, protection type IP65, protection class I, impact resistance IK08, windage area 0,008 m², dimensions (L×H×W): 85 × 86 × 85 mm, weight 0.9 kg

The modular luminaire design makes the replacement of components possible. The product meets the demands of the applicable EU guidelines and product safety regulations and bears the CE mark.

IP65 IK08

Specification

Wattage	7 W	Beam angle (FWHM)	6°
Delivered lumens	86 lm/W	Housing colour	silver grey
Light source	LED 4000 K	Power supply cable	Ø 6 – 13 mm
Color Rendering Index	CRI > 80	Protection type	IP65
Colour tolerance	max 2 SDCM	Protection class	I
Lifetime ta 25° C	L90/B10 > 50.000 h	Impact resistance	IK08
Control gear	on / off	Windage area	0,008m²
Input voltage AC	120 – 250 V	Dimensions	85 × 86 × 85 mm
Input voltage DC	160 – 255 V	Weight	0,90 kg
Voltage protection	2 kV L/N | 2 kV L/PE	Max. ambient temperature ta	45°
Luminaires per B16A / C16A	100 / 164		